WASTE MANAGEMENT SYSTEM

# GARBAGE & LINEN CHUTES

www.unitech-ikk.com
www.sfsp-ikk.com
wwww.ikkgroup.com

UNITECH
For Building and Construction Materials

# WASTE MANAGEMENT SYSTEM
# (GARBAGE & LINEN CHUTES)

PRODUCED BY

SPECIALIZED FACTORY FOR STEEL PRODUCTS
SIGMA FACTORY FOR STEEL PRODUCTS

# Waste Management Sys. (Garbage & Linen Chutes)

# Index

# ABOUT UNITECH

# Unitech Introduction

Unitech is a Saudi based Multinational Company providing building and construction solutions that is empowering the region's construction industry for the past 40+ years. We have been successfully providing solutions through mastering our main business activities: Design, Manufacture and Trade.

**Design:**
Provide Design & Engineering Solution to the construction sector, complying with international & local standards.

**Manufacture:**
Operating with Global Standards, we are widely recognized for our advanced light steel solutions and Hot-Dip Galvanization Facility.

**Trade:**
We are one of the region's largest Importer/Exporter of Building & Construction Materials.

Unitech is an **ISO QMS 9001:2015** certified company and is a member of the US Green Building Council. Our experienced teams and operations are present across the Middle-East North Africa regions (MENA) and Pakistan, giving us an extensive regional network that benefits our clients and partners. We are also present in Europe via our design and engineering office in Stuttgart.

For more information, please visit: www.unitech-ikk.com

# Mission & Vision

**Mission**

We have the conviction to be the leader in building & construction industry through:

- Providing excellence in services with passionate & educated sales force
- Strengthen culture through unified sense of purpose
- Innovative product range which is customer centric
- Reputable and quality service company
- Attracting, engaging and retaining talent

**Vision**

To be the Customer's First Choice...

# Our Strategy

Unitech's strategy continues to focus on accelerating its business throughout the region, to service the construction sector via superior products & solutions, backed up by a group of highly experienced people in the field. Unitech also aims to enhance its geographical presence in its areas of interest and where opportunities exist.

We combine a deep understanding of building and construction materials markets with a successful history of upgrading our products and developing our processes.

We have the qualified employees, the know-how and the products to service major construction projects, medium sized to mega projects taking in care our positive contribution to our societies.

## We thrive towards excellence by acknowledging:

Customer Satisfaction

Partner and Supplier Relations

Employee Retention

Positive Influence on Society and Environment

# Our Employees

We are a company that prides itself on its 'family' culture and we seek out high-caliber people. We are a company that has, at its core, a team philosophy that is clearly apparent each and every day - there is a real sense of being there for one another.

We believe in nurturing the skills of our team members and providing growing levels of responsibility. Our people bring unique skills, energy, expertise, experience and perspectives to our workforce.

Unitech›s family of employees consists of experienced, well-motivated and dedicated team of engineers, technicians, sales executives and management staff. This team is committed to serve our customers, with the best solutions available in the market.

# Our Journey
# 40+ Years of Excellence

Since 1979, having been set to become an independent company under the framework developed by Sheikh Isam Kabbani, Unitech started its journey of success with confidence and enthusiasm, hard work and care to detail and a commitment to become the best within its industry.

Its dedicated people could only imagine what the future could bring to this newly established entity. Unitech's journey of success has been marked with outstanding achievements and superior accomplishments. Year by year, Unitech has been acknowledged as the "First Choice for Building & Construction Material" by major construction consultants in the region, governmental authorities, well-known contracting and project development corporations.

We have obtained invaluable knowledge about the construction industry in general, providing specialized solutions to construction projects throughout MENA region. From a couple of outlets in Saudi Arabia, Unitech today is present all over the Kingdom and in several countries throughout the region providing its products and
solution to various locations worldwide.

**Est. 1979**

**THE BEGINNING**
Unitech was established in the Western Region of KSA as a Sales Company selling basic construction material.

During the same year, another branch was established in the heart of the kingdoms capital, Riyadh.

**1980 to 1989**

**AGE OF GREAT RISK**
Unitech Dammam was open for business in the oil-rich eastern coast of Saudi Arabia.

Within these 10 years the idea of in-house manufacturing facility was born and Specialized Factory for Steel Products (SFSP) was established in Riyadh.

**1990 to 1999**

**AGE OF GROWTH**
Branches of Unitech were established in Makkah, Madina, Khamis Mushayt and Jubail.

The need to increase its range of products and the necessity to have production lines for mass production lead to the decision to move the SFSP Factory from Riyadh to Jeddah.

# Pioneering Construction
# Since 1979

We are constantly evolving in order to become more flexible in our operations, more sustainable in our societies, and more innovative in conducting our business.

By delivering superior products tailored to the specific construction needs, ambitious solutions, and an outstanding customer service, we serve today's needs through developing tomorrow's markets.

Helping construction projects experience success is what fueled its days. Unitech is keen to continue offering superior products, a wide spectrum of solutions, governed by our top-notch management style.

Such aspirations require trust in our responsibilities. Our Responsibilities for the future and with this in mind we continue to target excellence with committed efforts.

**2000 to 2015**

**AGE OF CONSTRUCTION BOOM**

Qassim, Hofuf and Yanbu Branches were inaugurated in KSA and branches outside KSA were established in UAE, Egypt, Lebanon, Oman, Jordan and Germany in order to facilitate the construction boom in the Middle East.

During this period SFSP state of the art facilities were launched in DIC UAE and Unitech thrived, marking some of the best years in business.

**2016 to 2019**

**AGE OF GREAT CHANGE**

This period, marked the age of great change in order to align with the economic shift in the GCC and the world in general.

Company wide right sizing initiatives were taken especially in KSA to align with the kingdoms ambitious vision 2030 and during this period the upgraded SFSP state of the art facilities were launched in JIC 3 KSA.

**2020 & Beyond**

**NEW FRONTIER**

This period marks the expansion of Unitech into the South and Central Asian territories. We aim to cater these markets and play an active role in these countries development.

During 2020, Unitech Pakistan was officially inaugurated and marked the entrance of Unitech into Asian Market.

# Our Manufacturing Arm SFSP

SFSP is a leading manufacturer and fabricator of light steel construction products in the region, servicing the construction sector through its state of the art facilities which are spread all over the MENA region. Products of SFSP are manufactured from quality raw material according to the relevant international standards to meet all kinds of construction projects requirements, such as MEP, façade, blockwork & waste management systems.

## Commitment to Quality

Our commitment to quality is clearly revealed in the way we do our business; our processes, our close interaction with our clients as well as the strict product inspection procedures. To achieve this, we have implemented quality systems & processes that are continually being improved to satisfy our customer's needs.

## Product Development

Product development process is substantial to the success of our business. We leverage all resources to provide up-to-date reliable products, environmentally friendly, durable to withstand the toughest weather conditions. Our engineers are constantly testing the products, seeking to present a combination of performance and quality across all our product ranges.

For more information, please visit:
www.sfsp-ikk.com

# Value Chain

Our value chain starts up with the quality of the raw materials and ends up in client satisfaction. Our business practices backed up by all technologically essential business elements are supported by an efficient logistics, warehousing and delivery system that maintains a valuable supply chain for products.

The value chain is integrated in our business module, giving us strength and preserving our good reputation gained through the past 4 decades.

# Engineering
# Specialty

Our products development engineers integrate their vast knowledge to provide the perfect solution to projects within the required specifications and time-frame.

The products development department maintains highly skilled calibers with a dedication towards efficient and reliable solutions even in the most complicated cases where delicacy and skillful approaches are indispensable.

## Design and Product Safety

Our design and engineering office in Stuttgart ensures our products comply with relevant European and international standards of fabrication, taking into attention the safety factors which govern the public safety of projects.

## Sustainability and Responsibility

We are constantly working hard to reduce our environmental footprints while maintaining the high quality and safety standards. We have set our targets to become three times more efficient in the next 10 years. Our responsibility towards our stakeholders is valued through our positive contributions towards our colleagues, our business partners and our communities as well.

# Our Design Office

UNITECH DEUTSCHLAND is a "Design & Engineering" Office. Unitech Germany support Unitech & SFSP operations through well-informed cadre of engineers. They help our customers from conception to the completion by delivering design, engineering and project management services.

Thanks to our multidisciplinary team in Unitech Germany and their expertise, we assist you in your ambition to develop your innovation, your engineering and your organization. Our goal is to serve our clients through these elements:

- Excellent in engineering ideas and solutions
- High quality in performance
- Firmness on meeting deadlines

# SFSP Certifications

## ISO 9001 : 2015
(Quality Management Systems)

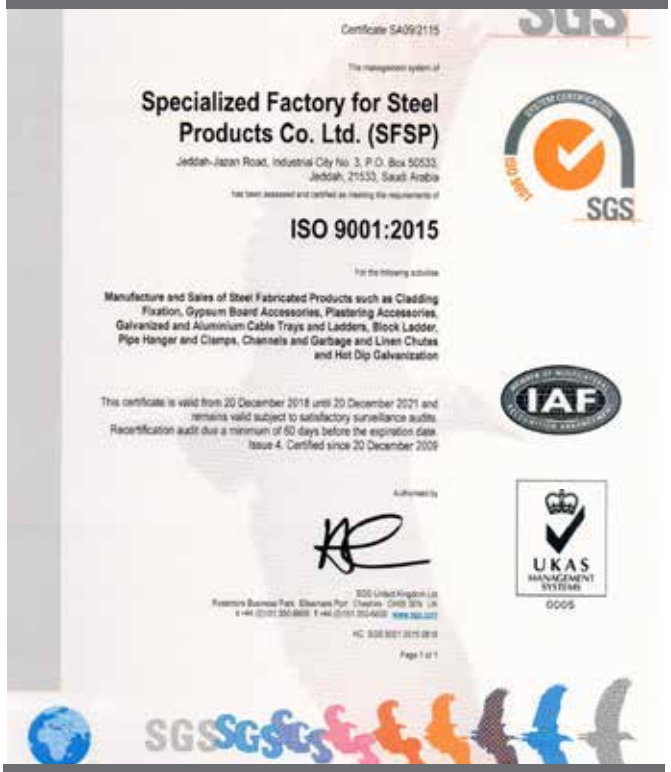

Certificate SA09/2115

The management system of

**Specialized Factory for Steel Products Co. Ltd. (SFSP)**

Jeddah-Jazan Road, Industrial City No. 3, P.O. Box 50533, Jeddah, 21533, Saudi Arabia

has been assessed and certified as meeting the requirements of

**ISO 9001:2015**

For the following activities

Manufacture and Sales of Steel Fabricated Products such as Cladding Fixation, Gypsum Board Accessories, Plastering Accessories, Galvanized and Aluminium Cable Trays and Ladders, Block Ladder, Pipe Hanger and Clamps, Channels and Garbage and Linen Chutes and Hot Dip Galvanization

This certificate is valid from 20 December 2018 until 20 December 2021 and remains valid subject to satisfactory surveillance audits. Recertification audit due a minimum of 60 days before the expiration date. Issue 4. Certified since 20 December 2009

Authorised by

SGS United Kingdom Ltd
Rossmore Business Park, Ellesmere Port, Cheshire, CH65 3EN, UK
t +44 (0)151 350 6666 f +44 (0)151 350 6600 www.sgs.com

HC SGS 9001 2015 (2018)

Page 1 of 1

## 14001 : 2015
(Environmental Management System)

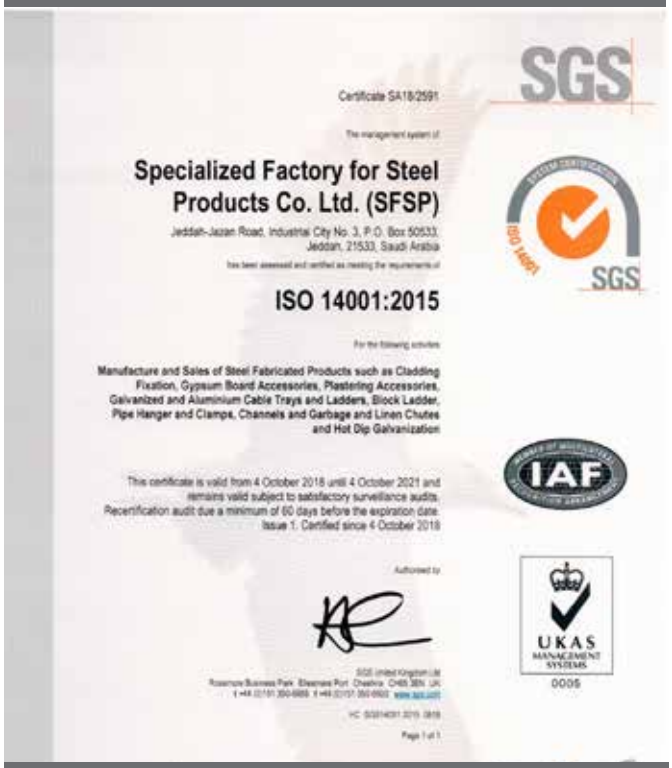

Certificate SA18/2591

The management system of

**Specialized Factory for Steel Products Co. Ltd. (SFSP)**

Jeddah-Jazan Road, Industrial City No. 3, P.O. Box 50533, Jeddah, 21533, Saudi Arabia

has been assessed and certified as meeting the requirements of

**ISO 14001:2015**

For the following activities

Manufacture and Sales of Steel Fabricated Products such as Cladding Fixation, Gypsum Board Accessories, Plastering Accessories, Galvanized and Aluminium Cable Trays and Ladders, Block Ladder, Pipe Hanger and Clamps, Channels and Garbage and Linen Chutes and Hot Dip Galvanization

This certificate is valid from 4 October 2018 until 4 October 2021 and remains valid subject to satisfactory surveillance audits. Recertification audit due a minimum of 60 days before the expiration date. Issue 1. Certified since 4 October 2018

Authorised by

SGS United Kingdom Ltd
Rossmore Business Park, Ellesmere Port, Cheshire, CH65 3EN, UK
t +44 (0)151 350 6666 f +44 (0)151 350 6600 www.sgs.com

HC SGS 14001 2015 (2018)

Page 1 of 1

## ISO 45001 : 2018
(Occupational Health & Safety)

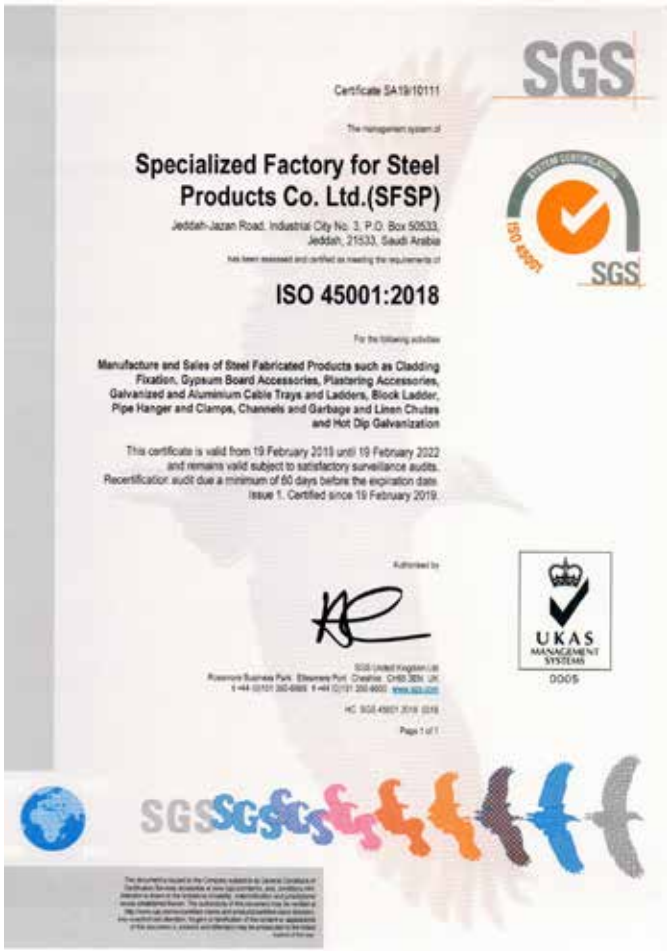

Certificate SA19/10111

The management system of

**Specialized Factory for Steel Products Co. Ltd.(SFSP)**

Jeddah-Jazan Road, Industrial City No. 3, P.O. Box 50533, Jeddah, 21533, Saudi Arabia

has been assessed and certified as meeting the requirements of

**ISO 45001:2018**

For the following activities

Manufacture and Sales of Steel Fabricated Products such as Cladding Fixation, Gypsum Board Accessories, Plastering Accessories, Galvanized and Aluminium Cable Trays and Ladders, Block Ladder, Pipe Hanger and Clamps, Channels and Garbage and Linen Chutes and Hot Dip Galvanization

This certificate is valid from 19 February 2019 until 19 February 2022 and remains valid subject to satisfactory surveillance audits. Recertification audit due a minimum of 60 days before the expiration date. Issue 1. Certified since 19 February 2019.

Authorised by

SGS United Kingdom Ltd
Rossmore Business Park, Ellesmere Port, Cheshire, CH65 3EN, UK
t +44 (0)151 350 6666 f +44 (0)151 350 6600 www.sgs.com

HC SGS 45001 2018 (2018)

Page 1 of 1

## STD 096
(Q-Mark Certificate)

Q-MARK CERTIFICATION BMTRADA

UKAS PRODUCT CERTIFICATION 012

Exova BMTRADA

**CERTIFICATE OF REGISTRATION**

This is to certify that

**Sigma Factory for Steel Products**
P.O. Box 37991
Dubai Industrial City
Dubai
United Arab Emirates

Meets the requirements of the Exova BM TRADA **Q-Mark International Fire Door Manufacture** scheme to **STD 096 - Issue 3 - 01/12/2015** which only operates in Bahrain, Egypt, Iraq, Jordan, Kuwait, Lebanon, Libya, Oman, Qatar, Saudi Arabia and The United Arab Emirates for the products on the attached schedule

**Karen Prendergast**
Sector Director - Certification
Exova BM TRADA

Exova (UK) Ltd. (T/A Exova BM TRADA), Chiltern House, Stocking Lane, High Wycombe, Buckinghamshire, HP14 4ND, UK
Registered Office: Exova (UK) Ltd, Lochend Industrial Estate, Newbridge, Midlothian EH28 8PL United Kingdom. Reg No. SC070429.

This certificate remains the property of Exova (UK) Ltd. This certificate and all copies or reproductions of the certificate shall be returned to Exova (UK) Ltd or destroyed if requested. Further clarification regarding the scope of this certificate and verification of the certificate is available through Exova BM TRADA or at the above address or at www.exovabmtrada.com

The use of the UKAS accreditation mark indicates accreditation in respect of those activities covered by the accreditation certification 012

Multisite clients - The scope of certification shown above includes the participating sites shown on the registration schedule

Page 1 of 2

**Certificate Number**
476

**Date of Initial Certification**
16 June 2014

**Date of last issue**
13 October 2017

**Date of Expiry**
15 June 2020

## ISO 9001 : 2015
## (Quality Management System)

Alcumus ISOQAR

# Certificate of Registration

This is to certify that the Management System of:

**Sigma Factory for Steel Products**

**P.O. Box 37991, Saih Suhaib - 3, 4 Round About, Dubai Industrial City**
**Dubai, United Arab Emirates**

has been approved by Alcumus ISOQAR and is compliant with the requirements of:

**ISO 9001:2015**

| | |
|---|---|
| **Certificate Number:** | **22244-Q15-001** |
| Initial Registration Date: | 23 February 2015 |
| Previous Expiry Date: | 22 February 2021 |
| Recertification Date: | 30 November 2020 |
| Re-issue Date: | 01 December 2022 |
| Current Expiry Date: | 22 February 2024 |

**Scope of Registration:**

Trading and Manufacturing of all kinds of Steel Related Construction Materials

Signed:
Alyn Franklin, Chief Executive Officer
(on behalf of Alcumus ISOQAR)

This certificate will remain current subject to the company maintaining its system to the required standard. This will be monitored regularly by Alcumus ISOQAR. Further clarification regarding the scope of this certificate and the applicability of the relevant standards' requirement may be obtained by consulting Alcumus ISOQAR.

## ISO 14001 : 2015
## (Environmental Management System)

Alcumus ISOQAR

# Certificate of Registration

This is to certify that the Management System of:

**Sigma Factory for Steel Products**

**P.O. Box 37991, Saih Suhaib - 3, 4 Round About, Dubai Industrial City**
**Dubai, United Arab Emirates**

has been approved by Alcumus ISOQAR and is compliant with the requirements of:

**ISO 14001:2015**

| | |
|---|---|
| **Certificate Number:** | **22244-E15-001** |
| Initial Registration Date: | 22 September 2015 |
| Previous Expiry Date: | 21 September 2021 |
| Recertification Date: | 11-12 July 2021 |
| Re-issue Date: | 01 December 2022 |
| Current Expiry Date: | 21 September 2024 |

**Scope of Registration:**

Trading and Manufacturing of all kinds of Steel Related Construction Materials

Signed:
Alyn Franklin, Chief Executive Officer
(on behalf of Alcumus ISOQAR)

This certificate will remain current subject to the company maintaining its system to the required standard. This will be monitored regularly by Alcumus ISOQAR. Further clarification regarding the scope of this certificate and the applicability of the relevant standards' requirement may be obtained by consulting Alcumus ISOQAR.

## OHSAS 45001 : 2018
## (Health & Safety Management System)

Alcumus ISOQAR

# Certificate of Registration

This is to certify that the Management System of:

**Sigma Factory for Steel Products**

**P.O. Box 37991, Saih Suhaib - 3, 4 Round About, Dubai Industrial City**
**Dubai, United Arab Emirates**

has been approved by Alcumus ISOQAR and is compliant with the requirements of:

**ISO 45001:2018**

| | |
|---|---|
| **Certificate Number:** | **22244-OHS-001** |
| Initial Registration Date: | 22 September 2015 |
| Previous Expiry Date: | 11 March 2021 |
| Recertification Date: | 11-12 July 2021 |
| Re-issue Date: | 01 December 2022 |
| Current Expiry Date: | 21 September 2024 |

**Scope of Registration:**

Trading and Manufacturing of all kinds of Steel Related Construction Materials

Signed:
Alyn Franklin, Chief Executive Officer
(on behalf of Alcumus ISOQAR)

This certificate will remain current subject to the company maintaining its system to the required standard. This will be monitored regularly by Alcumus ISOQAR. Further clarification regarding the scope of this certificate and the applicability of the relevant standards' requirement may be obtained by consulting Alcumus ISOQAR.

Alcumus ISOQAR Limited, Alcumus Certification, Cobra Court, 1 Blackmore Road, Stretford, Manchester M32 0QY
T: 0161 865 3699 F: 0161 865 3685 E: isoqarenquiries@alcumusgroup.com W: www.alcumusgroup.com/isoqar
This certificate is the property of Alcumus ISOQAR and must be returned on request.

## BS EN 61537:2007 (KEMA - KEUR Certified For Cable Management Products)

DEKRA

# CERTIFICATE

Issued to:

| Applicant: | Manufacturer/Licensee: |
|---|---|
| **Isam Kabbani Trading Est. (Unitech)** | **Sigma Factory for Steel Products (SFSP)** |
| **Rashidiya** | **Saih Shuaib 3, 4R/A, Dubai Industrial City,** |
| **Dubai, United Arab Emirates** | **Dubai, United Arab Emirates** |

| | | |
|---|---|---|
| Product | : | Cable management system |
| Trade name | : | SFSP |
| Types | : | IE-CT-X-10, IE-CT-X-12, IE-CT-X-15, IE-CT-X-20 |

The product and any acceptable variation thereto is specified in the Annex to this certificate and the documents therein referred to.

DEKRA hereby declares that the above-mentioned product has been certified on the basis of:
- a type test according to the standard IEC 61537:2006 and EN 61537:2007
- an inspection of the production location according to CENELEC Operational Document CIG 021
- a certification agreement with the number 2156954

DEKRA hereby grants the right to use the KEMA-KEUR certification mark.

The KEMA-KEUR certification mark may be applied to the product as specified in this certificate for the duration of the KEMA-KEUR certification agreement and under the conditions of the KEMA-KEUR certification agreement.

This certificate is issued on: 20 January, 2014 and expires upon withdrawal of one of the above mentioned standards.

**Certificate number: 2156954.01**

DEKRA Certification B.V.

drs. G.J. Zoetbrood
Managing Director

H.R.M. Barends
Certification Manager



ACCREDITED BY THE DUTCH ACCREDITATION COUNCIL

DEKRA Certification B.V. Meander 1051, 6825 MJ Arnhem P.O. Box 5185, 6802 ED Arnhem The Netherlands
T +31 88 96 83000 F +31 88 96 83100 www.dekra-certification.com Registered Arnhem 09085396

# SFSP Certifications

## UL Certification*
(Cable Trays)

### CERTIFICATE OF COMPLIANCE

**Certificate Number** 20160816-E483358
**Report Reference** E483358-20160816
**Issue Date** 2016-AUGUST-16

**Issued to:** Sigma Factory for Steel Products
Saih Shuaib 3, 4 R/A Dubai Industrial City
Opposite DEWA Substation
Dubai UNITED ARAB EMIRATES

**This is to certify that representative samples of** CABLE TRAYS
Steel Channel Cable Tray, Ventilated, Heavy Duty (HCT), Very Heavy Duty (VCT) cable trays.

Have been investigated by UL in accordance with the Standard(s) indicated on this Certificate.

**Standard(s) for Safety:** ANSI/NFPA 70, "National Electrical Code" (NEC)
**Additional Information:** See the ULC Online Certification Directory at www.ulc.ca for additional information

Only those products bearing the ULC Listing Mark should be considered as being covered by ULC's Listing and Follow-Up Service.

The ULC Listing Mark generally includes the following elements: the symbol ULC in a circle; with the word "LISTED"; a control number (may be alphanumeric) assigned by ULC; and the product category name (product identifier) as indicated in the appropriate ULC Directory.

To confirm the status, validate the above information via the online directory.

Look for the ULC Listing Mark on the product.

Page 1 of 1

## UL Certification*
(Chute Type Fire Doors)

### CERTIFICATE OF COMPLIANCE

**Certificate Number** 20170811-R38825
**Report Reference** R38825-20170811
**Issue Date** 2017-AUGUST-11

**Issued to:** Sigma Factory for Steel Products
Saih Shuaib 3, 4 R/A Dubai Industrial City
Opposite DEWA Substation
Dubai UNITED ARAB EMIRATES

**This is to certify that representative samples of** CHUTE-TYPE FIRE DOORS
Chute-type fire door and frame assembly of the insulated type, rated up to and including 2 hr, 450°F Temperature Rise Rating.

Have been investigated by UL in accordance with the Standard(s) indicated on this Certificate.

**Standard(s) for Safety:** ANSI/UL 10B, Fire Tests of Door Assemblies
**Additional Information:** See the UL Online Certifications Directory at www.ul.com/database for additional information

Only those products bearing the UL Certification Mark should be considered as being covered by UL's Certification and Follow-Up Service.

Look for the UL Certification Mark on the product.

## UL Certification*
(Fire Barrier)

### CERTIFICATE OF COMPLIANCE

**Certificate Number** R40146
**Report Reference** R40146-20220524
**Date** 2022-May-25

**Issued to:** Sigma Factory for Steel Products
Saih Shuaib 3, 4 R/A Dubai Industrial City
Opposite DEWA Substation
Dubai AE

**This is to certify that representative samples of** MECHANICAL JOINT ASSEMBLIES
The products covered by this Section are mechanical joint assemblies designated Nexus Fire Barrier (NFB) for use in various joint systems described in the Fire Resistance Directory.

Have been investigated by UL in accordance with the Standard(s) indicated on this Certificate.

**Standard(s) for Safety:** UL 2079, Tests for Fire Resistance of Building Joint Systems

**Additional Information:** See the UL Online Certifications Directory at https://iq.ulprospector.com for additional information

This Certificate of Compliance does not provide authorization to apply the UL Mark. Only the UL Follow-Up Services Procedure provides authorization to apply the UL Mark.

Only those products bearing the UL Mark should be considered as being UL Certified and covered under UL's Follow-Up Services.

Look for the UL Certification Mark on the product.

Bruce Mahrenholz, Director North American Certification Program

UL LLC

Any information and documentation involving UL Mark services are provided on behalf of UL LLC (UL) or any authorized licensee of UL. For questions, please contact a local UL Customer Service Representative at http://ul.com/aboutulfocations/

# SFSP Products

SFSP produces a variety of products ranging from cable management systems; cable trays, cable ladders, basket trays, trunkings and support systems, to mechanical cladding fixations, steel lintels and block work accessories, plasterers' beads, expanded metal and block work reinforcement, strut channel systems, pipe clamps & hangers, gypsum profiles as well as garbage and linen chutes. With the introduction of new machines and the enhancement of production methods, SFSP continues to develop its production methods systematically as well as thoroughly. Its design office in Stuttgart, Germany provides a comprehensive design and calculation case studies, enabling the factory to have the safety factors required for the usage of its products.

# MEP Solutions

## Cable Management Systems

Cable Management Systems are economical and designed to meet most requirements of cable and electrical wire installations and comply to international standards of fabrication and finishing.

## Cable Trays & Accessories

Cable Trays are designed to meet most requirements of cable and electrical wire installations and comply to local and international standards of fabrications and finishes.

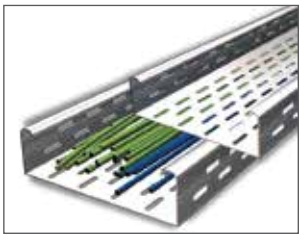

## Cable Ladders (Welded & Swaged)

Cable Ladders of different side heights are available upon request.

## Basket Trays & Accessories

SFSP's Basket Tray systems make connections fast and simple with limited need for tools. Its design allows for continuous airflow, and prevents heating up of cables. SFSP's Basket Tray comes in a full range of sizes and is made with high-strength welded steel wires.

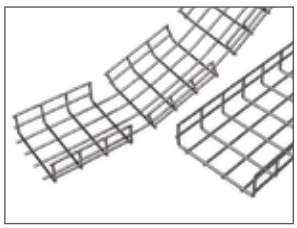

## Cable Trunkings

Cable Trunkings and Accessories are offered in a comprehensive range. Mill galvanized, hot-dip galvanized, and powder coated are the various finishes produced in our factories.

## Underfloor Trunking

Underfloor Trunking Systems solutions incorporate a range of products for the distribution of power and data services , it is a coordinated set of containments that protect, segregate, contain, and route cables within a given environment.

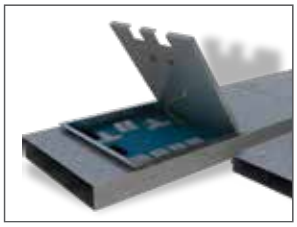

## Fiberglass Reinforced Plastic (FRP) Cable Tray / Ladder

SFSP Fiberglass Reinforced Plastic (FRP) Cable Management Systems are designed, manufactured, and tested to be installed in most harsh environmental conditions of onshore and offshore facilities for several industries including Oil and Gas, Petrochemicals, Manufacturing, Mining and others.

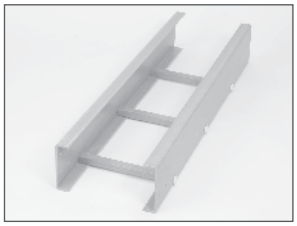

## Cable Management Support Systems

Cable Support Systems are well designed to provide necessary support for cable trays, cable ladders and trunkings. Cable supports are manufactured according to common standards from high quality raw materials.

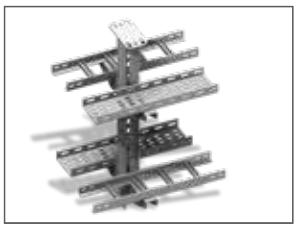

## C-Channel Strut Systems

SFSP's Metal Framing Systems provide an economical solution for electrical, mechanical and industrial supports with a wide variety of applications in the construction industry.
Applications: - Pipe and Conduit Supports - Tunnel Pipe Stanchions - Racks and Shelvings - Wall Framings.

## Pipe Clamps & Hangers

Pipe Clamps and Hangers from SFSP used in the support of pipes and equipments are manufactured according to the highest standards of fabrication. A diversified choice of Pipe Hangers, Pipe Clamps, EMT Straps, Omega Clamps, Beam Clamps, J and U-Bolts and Threaded Accessories.

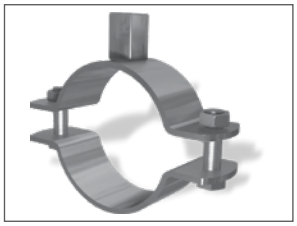

## Galvanized Threaded Rods and Accessories

Threaded rod, often referred to as a stud, is a rod of varying length that is threaded in a helical structure. Similar in appearance to a screw, the threading extends around and along the rod to cause rotational movements when in use.

## Access Panels by FEROX

Ferox Access Panels provides complete solutions of several types of access panels including Hook Type, Pivot Type, Tiled Type as well as fire rated access panels and hygienic access panels. A variety of finishes are available including stainless steel of different grades, galvanized steel with powder coating.
Ferox Access Panels are manufactured from high quality material and assembled with stainless steel hardware.

## Roof hatches by FEROX

Roof hatch provides safe and convenient access to commercial building roof areas using interior ladders and stairs for maintenance work. It can be installed on flat roofs with a maximum slope of 30°.Made of steel frames, doors and stainless steel hardware. Powder coated to provide corrosion resistance and outstanding exterior durability.

# Architectural & Finishing Solutions

## Mechanical Cladding Fixation (Stangle)

Stangle Cladding Fixation includes design, calculation and production of several types of mechanical fixings and accessories used for cladding purposes. Stainless and galvanized steel are among the various materials used in the fabrication.

## Alumimium Sytem for Stone Cladding

SFSP aluminum systems are designed and calculated to provide a practical & safe solutions of stone cladding. Wide range of aluminum profiles with different shapes to support different types of stone cladding.

## Waste Management Sys. (Garbage & Linen Chutes)

Chutes from SFSP are very convenient, simple and low cost method of controlling and disposing of refuse and linen. Chutes meet the most stringent requirements of environmental health and safety.

## Dry Wall & Ceiling Profiles

Gypsum Boards are considered among the most economic and ideal way for wall partitioning. Easy to install, saves time and money, gypsum boards can be used as a backing for wall treatments such as wall paper, fabric, title and wood paneling or it can simply be painted.

## Metal Ceiling Grid Systems

SFSP Ceiling Grid System is a practical, convenient ceiling system. It has a complete range of main c-channel sections and complementary parts so that you can adapt the modules to suit your design needs and load requirements.

## Expansion Joint System by Nexus

Our variety of expansion joints includes profiles for walls and floors, profiles for seismic movements, watertight profiles. Our products suit pedestrian as well as heavy load traffic areas.

## Entrance Matting System by Nexus

Nexus Entrance matting systems provides heavy duty entrance mats, composed of aluminium profiles with carpet, brushes or rubber inserts. For any design of any shape, being round, square, oval, or any other symmetrical or asymmetrical shape, Nexus offers a variety of entrance matting profiles

## Profiles by Nexus

Nexus offer comprehensive solutions for the construction industry ranging from Expansion Joint Covers and Fire Barriers to Entrance Matting Systems, Wall and Floor Profiles, Tactile Solutions, etc... NEXUS range of products is manufactured according to most common international standards to meet the requirements of commercial, residential, governmental, transportation, healthcare and educational projects.

## Phenolic Compartment by CUBIX

CUBIX phenolic compartment and partition systems are manufactured and customized to meet the precise needs of simple to complicated projects with its top-notch finish, quality of material and within a timely delivery. A complete solution with a wide selection of colors and textures are available.

## Raised Access Flooring by PIXEL

PIXEL Raised Access Flooring offers comprehensive solutions of High Tech Raised Access Flooring Systems for the construction industry. PIXEL Raised Access Flooring are manufactured according to most common international standards to meet the requirements of commercial, residential, governmental, transportation, healthcare, and educational projects.

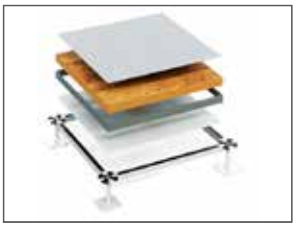

# Civil Solutions

## Expanded Metals, Plasterers' Beads

Expanded Metals help the formation of joints, protection of corners and resistance against cracks, chips and impact damage. SFSP manufactures inaccordance with BS EN 13658 – 2, ASTM C847-18, BS EN 845-3:2003+A1:2008, ASTM A 951/A 951M - 2016 standards.

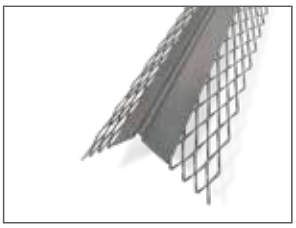

## Block Ladder Reinforcement

SFSP ladder and truss types are used for the reinforcement of brick and block masonry to give improved tensile strength to walls subjected to lateral loading e.g. wind and seismic. SFSP Block reinforcements reduces the risk of cracking either at stress concentration around opening.

## Steel Lintels & Block Work Accessories

Steel Lintels provide a combination of strength and light weight, resulting in efficient load bearing performance and increased productivity on site. They are characterized by their ease of installation in addition to time as well as money saving. SFSP manufactures Steel Lintel in accordance with BS EN 845-2:2013+A1:2016 and according to relevant standards BS 5977 Part 2:1983.

# SFSP Products are solely distributed by UNITECH for Building and Construction Materials

| All Products Manufactured by Sfsp are Solely Distributed by SFSP Sister Companies in the Following Countries | |
|---|---|
| **KSA** | |
| Isam Kabbani & Partners for Building and Construction Materials Co., Ltd. | شركة عصام قباني وشركاه لمواد الأنشاء والتعمير المحدودة |
| **BAHRAIN** | |
| Isam Kabbani Trading Est. | مؤسسة عصام قباني التجارية |
| **UAE** | |
| Issam Kabbani Trading Company LL | شركة عصام قباني للتجارة |
| **EGYPT** | |
| Unitech Egypt for Building Materials | شركة يونيتك مصر لمواد البناء |
| **OMAN** | |
| Isam Kabbani & Partners Trading Co. | شركة عصام قباني وشركاه للتجارة |
| **QATAR** | |
| Unitech Qatar for Building & Construction Materials Ltd., W.L.L | شركة يونيتك قطر لمواد الانشاء والتعمير المحدودة |
| **KUWAIT** | |
| Hassan Kabbani for General Contracting Est. | مؤسسة حسان قباني للمقاولات العامة للمباني |
| **LEBANON** | |
| Unitech ME s.a.r.l | شركة يونيتك ميدل إيست ش.م.م |
| **PAKISTAN** | |
| Unitech IKK Pakistan (PVT.) LTD. | شركة يونيتك ميدل إيست ش.م.م |

## SFSP CUSTUMER SERVICE CALL CENTER

**KSA**

+966 13 8590097, Ext. 3214

**UAE**

+971 4 8181925, Ext. 4269

# GENERAL INFORMATION

# GARBAGE & LINEN CHUTES

Chutes from SFSP are very convenient, simple and low cost method of controlling and disposing of refuse and linen.
Chutes meet the most stringent requirements of environmental health and safety. Chutes are used as original equipment in new buildings, such as: Hotels, Hospitals, High Rises and Residential Towers.

## Choices of Materials

SFSP provides refuse and linen chutes from the following high quality materials:
- Stainless Steel: SFSP strongly recommends the use of stainless steel for the manufacture of refuse chutes. Stainless is highly resistant to the humidity, acid and alkalis contained within refuse.

- Galvanized Steel: Galvanized steel does not have the same protective characteristics of stainless steel, yet, it is used extensively for refuse chutes.

## Material Thickness & Gauges

SFSP provides the following material gauges:
- 1.5mm (16 Gauge)
- 2.0mm (14 Gauge)
- 3.0mm (11 Gauge) (when specified).

## Indoor Chutes

The majority of refuse chutes are fitted internally within a building. SFSP chutes can either pass through the floor slab of the building or be fixed within a vertical shaft.

## Outdoor Chutes

SFSP refuse chutes can be fixed externally to most types of building, particularly useful when a refuse chute has to be provided after the building has been finished or where it is not possible to replace in the
same location. External refuse chutes can be single or double skinned.

# MATERIALS

**STAINLESS STEEL**
Austenitic Stainless Steels
SS 304 & SS 316
As per:
ASTM A 240/ DIN 17400 /EN 10088-2
ASTM A480 / ASTM A666 / ISO 3506 / EN 10028-7 /JIS G 4304
F.1 Stainless Steel Fasteners EN 3506
F.2 Stainless Steel Wire BS 1554, ASTM A276

**ALUZINK STEEL**
AluZink Steel DX 51D + AZ
As per:
EN 10215 / EN 10143/ DIN 55928 /ASTM A 792

**ALUMINIZED STEEL**
Aluminized Steel CR4: ASTM A463:2
Aluminized STC (H2): BS 1470

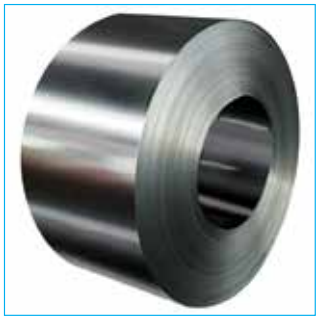

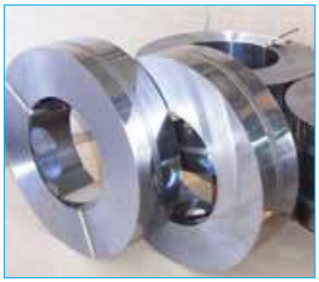

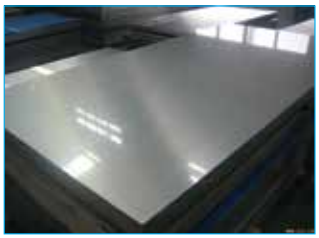

# DESIGN OF CHUTES

## Choices of Materials

SFSP provides refuse and linen chutes from the following high quality materials:

Stainless Steel: SFSP strongly recommends the use of stainless steel for the manufacture of refuse chutes.

Stainless steel is highly resistant to the humidity, acid and alkalis contained within refuse.

Galvanized Steel: Galvanized steel does not have the same protective characteristics of stainless steel, yet, it is used extensively for refuse chutes.

| Material | 1.5 mm | 2.0 mm | 3.0 mm | Standard |
|---|---|---|---|---|
| Stainless Steel Type 304 | * | * | * | EN 10088-2 |
| Stainless Steel Type 316 | * | * | * | EN 10088-2 |
| Galvanized Steel | * | * | * | EN 10346 / DX51D+Z |
| Aluminized Steel | * | * | * | ASTM A463 / BS 6830 |
| Aluzink | * | * | * | EN 10215 / EN 10143<br>DIN 55928 /ASTM A 792 |

## Material Thicknesses & Gauges

SFSP provides the following material gauges:
- 1.5mm (16 Gauge)
- 2.0mm (14 Gauge)
- 3.0mm (11 Gauge) (when specified).

Usage of 1.5 mm thick material is recommended for buildings up to 10 storey's high, for other heights refer to the following table:

| Number of Storeys | Storey | Material Thickness |
|---|---|---|
| 1 – 10 | All | 1.5mm |
| 1 – 20 | 1 – 9<br>10 – 20 | 2.0mm<br>1.5mm |
| 1 – 30 | 1 – 6<br>7 – 20<br>21 – 30 | 3.0mm<br>2.0mm<br>1.5mm |
| 1 – 45 | 1 – 9<br>11 – 30<br>31 – 45 | 3.0mm<br>2.0mm<br>1.5mm |

## Useful Weights

| Material | Kg/m³ |
|---|---|
| Carboard stacked flat or baled, folded newspaper | 500 |
| Food Waste, well compacted | 600 |
| Vegetable waste, uncompacted | 200 |
| Empty Bottles | 300 |
| Mixed general refuse, similar to domestic | 150 |
| General office waste and paper | 50 |
| Waste paper loose in sacks | 20 |

# TECHNICAL INFORMATION

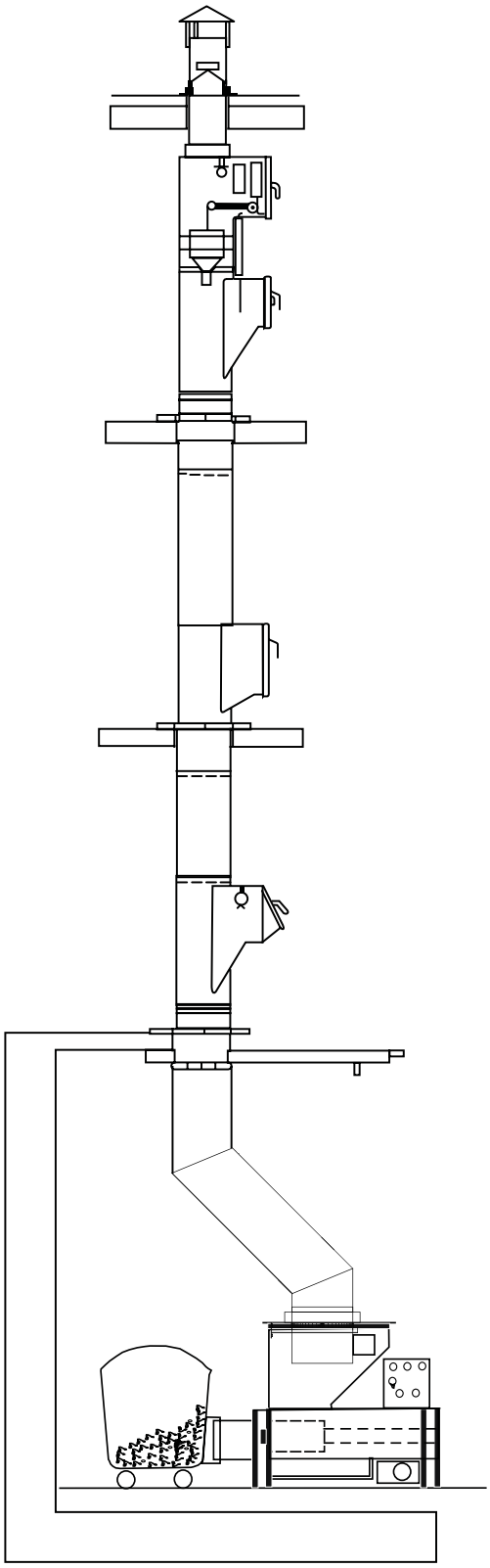

## Original Equipment

SFSP refuse chutes are specially designed for use in flats, hotels, hospitals, apartments, factories, condominiums, offices, commercial complexes and shopping centers.

## Indoor Chutes

The majority of refuse chutes are fitted internally within a building.
SFSP chutes can either pass through the floor slab of the building or be fixed within a vertical shaft.

## Outdoor Chutes

SFSP refuse chutes can be fixed externally to most types of building, particularly useful when a refuse chute has to be provided after the building has been finished or where it is not possible to replace in the same location. External refuse chutes can be single or double skinned. Please contact our technical department for further advice.

## Choosing the Correct Size of Chute

SFSP provides a comprehensive range of refuse chutes, both in size and material choice.

The choice of materials to be used are covered thoroughly elsewhere, the choice of refuse chute diameter is shown on this page.

However we strongly recommend the use of 600 mm diameter chutes, as in practical terms this diameter is the least likely to cause any long term problems.

Appreciating that design and space considerations sometimes lead to compromises, this table opposite is given as a guide to assist you in choosing the correct diameter of chute.

| Reccomended Chute Diameter | Plastic Sack Capacity | No. of Apartments per Chute |
|---|---|---|
| 500 mm | 20 liters | 21 - 30 |
| 550 mm | 30 liters | 31 - 40 |
| 600 mm | 40 - 50 liters | 40 + |
| 700 mm | 40 - 50 liters | 40 + |
| 800 mm | 45 - 55 liters | 45 + |
| 900 mm | 50 - 60 liters | 50 + |

# VARIATION

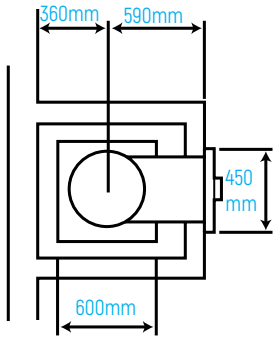


600 mm hole through floor slab for 500 mm chute

**500 mm diameter**

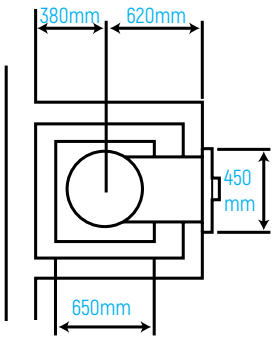


650 mm hole through floor slab for 550 mm chute

**550 mm diameter**

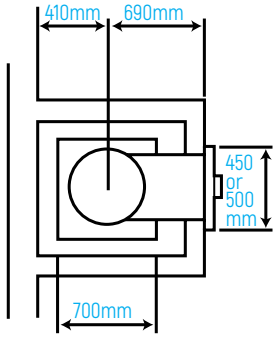


700 mm hole through floor slab for 600 mm chute

**600 mm diameter**

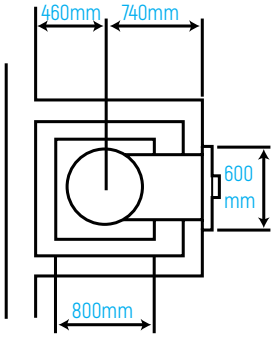


800 mm hole through floor slab for 700 mm chute

**700 mm diameter**

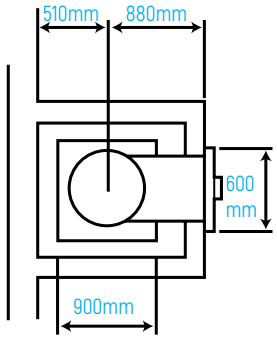


900 mm hole through floor slab for 800 mm chute

**800 mm diameter**

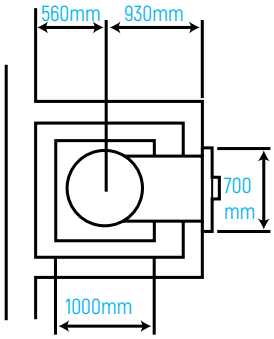


1000 mm hole through floor slab for 900 mm chute

**900 mm diameter**

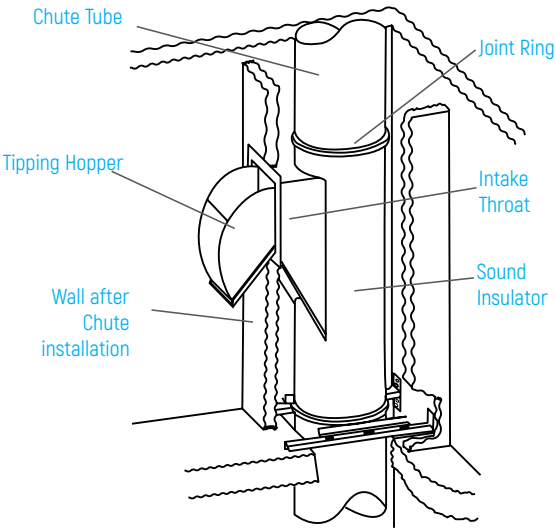

## Refuse Chute Sizes

SFSP chutes are available with the following standard internal diameters:
500mm (20"), 550mm (22"), 600mm (24")
700mm (28"), 800mm (32"), 900mm (36")
N.B: We will also manufacture to customers special requirements.

## Height

Varies according to individual building design.

SFSP provides chutes within the range of 1- 45 storeys, or from as small as 1 meter up to a maximum of 165-170 meters. Over this height two chutes should be provided, the first terminating at a mid building level refuse collecting room, the second chute to start at mid-building level and terminating at ground floor or basement level.

## Shape

To give an unimpeded free flow of refuse within a chute, the best shape has proved to be circular, SFSP refuse chutes therefore have a circular cross section. We will make square section chutes to customers special requirements.

## Refuse Chute Trunking

Cut to shape from flat metal sheet, mechanical rolled into an accurate cylindrical from. Vertical seams are according to material type and gauge either lock seamed or welded, to give smooth, watertight sealed joints.

The entire inner surface area of the trunking is smooth and free from any projections that will mpede the free flow of refuse within the total vertical length of the chute.

## Entry Section

This could be described as the most critical component of a refuse chute. If it is not designed and manufactured correctly there is a probability the refuse chute will not work satisfactorily.

The entry sections of SFSP chutes are designed and manufactured within the constraints of BS 1703:1977 / BS 5906:1980 to ensure complete satisfaction.

Flat metal sheet is accurately cut and shaped by highly skilled craftsmen, vertical seams being welded or lock seamed, horizontal are mechanically jointed or welded.

SFSP refuse chute entry sections have our specially designed Inner baffle, to prevent air or falling refuse already present in the chute from accidentally blowing back when  any refuse hopper is opened.

# ACCESSORIES

## Vents & Fans

Automatic Foul Air Exhaust Fan installed at the top of the chutes, usually above roof level this ventilator maintains a smooth flow of  fresh air within the refuse chute.
Normally changing the air approximately 50 times per hour. The foul air exhaust fan helps prevent the escape of any bad odors or explosive gases released by aerosols etc, through refuse hoppers or into the refuse room. For use with vent pipes of (9") 230 mm diameter or above.

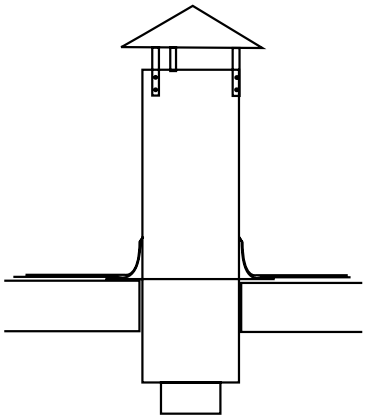

Standard Vent

## Technical Specification

Air displacement 200m3/hour. Fan motor, Class H tropicalized continuously rated, 1300 RPM. Electric Supply 220/240 volts or 110/120 volts, 50/60 Hz.
N.B. Flashed to roof by others.

## Full Diameter with Insect Screen:

Recommended on chutes if a foul air exhaust fan is not being specified. The fan diameteris usually 300 to 400 mm . The screen keeps out any insects or birds attracted to the vent pipe. An exhaust fan can be fitted to any full diameter vent pipe, complete with inspection door. It extends 4 feet (1.2m) above roof.

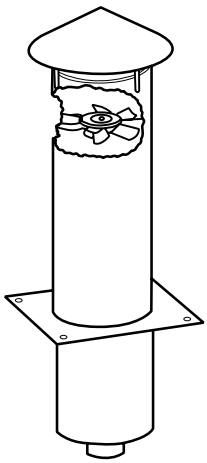

Standard Vent with fan

Standard Vent with fan

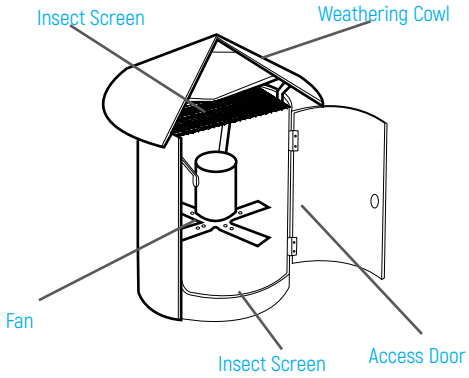


Standard Vent without fan

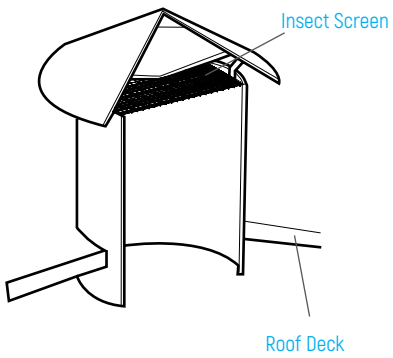


| Description | Vent Tube, 1.5 mm thick |
|---|---|
| Quantity | One Unit per Chute |
| Location | 1.22 meter above roof slab |

| Description | Fan |
|---|---|
| Quantity | One Unit per Chute |
| Location | Top of vent tube |

# CLEANING EQUIPMENT

## Automatic Chute Cleaning System

Specifically designed to clean the total vertical length of the internal surface of all chutes. The system is factory fabricated as an integral unit ready for immediate on site connection.
A cylindrical housing with replaceable stiff nylon brushes is automatically lowered and raised by a geared electric motor. The nylon brushes scrape and clean the internal surface as they move down and up the chute. The water supply for flushing the chute, the electric motor and the built in safety overloads, are all individually controlled by a robust electric logic control circuit.

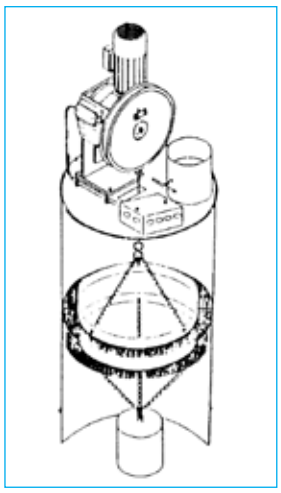

Automatic Brushing Device

## Electrical Specification

Supply 380/415 volts, 50/60hz, 3 phase.
Motor 1/6 HP 1600 R.P.M. continuous.

## Disinfecting and Sanitizing Unit

Designed to give manual or automatic flushing of the internal surface of SFSP chutes. Fitted above the topmost entry section of the refuse chutes as part of an automatic or manual cleaning system or on its own. Simple to operate and maintain, a disinfectant or sanitizing unit is recommended for use with every chute installation, particularly as it overcomes one of the problems associated with the use of chutes-strong odors. The specification given above can be changed by using a smaller volume stainless steel tank within an automatic chute cleaning system.

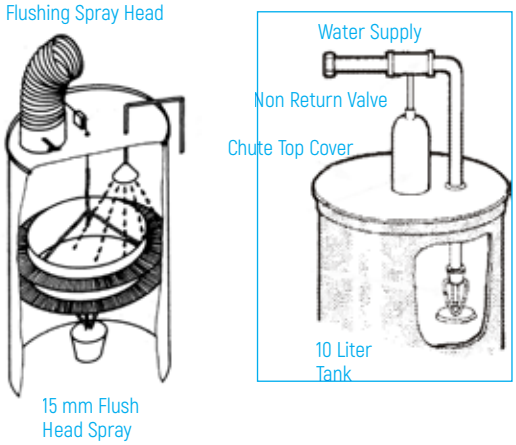


## Manual Cleaning System

Designed, like the automatic cleaning system, to clean the total vertical length of the internal surfaces of SFSP chutes. This manually operated system is factory fabricated as an integral unit, ready for immediate on-site connection. A cylindrical housing, with replaceable stiff nylon brushes, is manually lowered and raised on a high geared winch which has a ratchet to give operator safety. The water supply to the flushing head spray is manually controlled by a conveniently placed gate valve. Manual cleaning is recommended on buildings up to 5 storeys high. Water supply is made normal header tank pressure, at least 1800 mm above spray head.

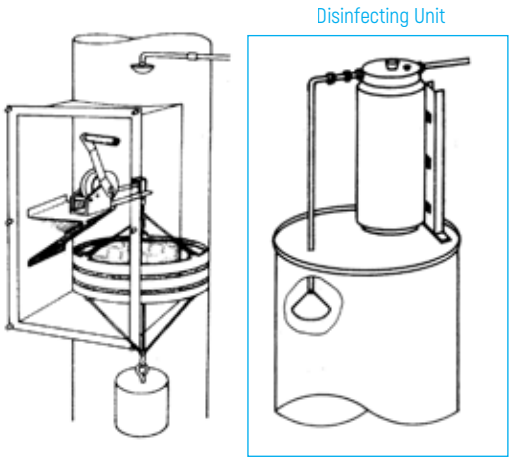

# COMPONENTS OF GARBAGE CHUTE SYSTEM

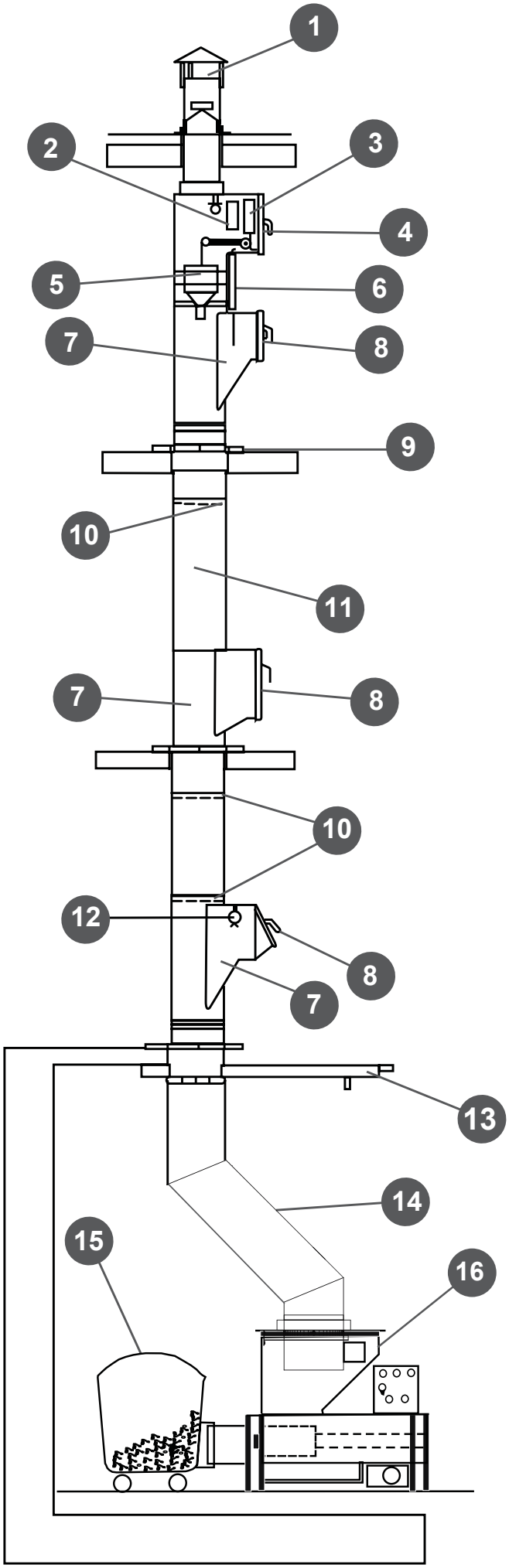


| | |
|---|---|
| 1. | Vent Tube with Insect Screen & Exhaust Fan |
| 2. | Solenoid Valve |
| 3. | Disinfecting & Sanitizing Unit |
| 4. | Access Door |
| 5. | Cleaning System & Brushing Device |
| 6. | Control Panel |
| 7. | Intake Throat |
| 8. | Hopper Door |
| 9. | Clamp Ring & Supporting Frame |
| 10. | Swaged Joint |
| 11. | Chute Tube |
| 12. | Cleaning & Fire Sprinklers |
| 13. | Fire Cut Off Door |
| 14. | Elbow |
| 15. | Garbage Container |
| 16. | Compactor |

# 1 VENT TUBE WITH INSECT SCREEN & EXHAUST FAN

Vents are installed at the top of the chutes, usually above roof level this ventilator maintains a smooth flow of fresh air within the refuse chute. The foul air exhaust fan helps prevent the escape of any bad odors or gases released by the garbage material.

## Automatic Foul Air Exhaust Fan

Installed at the top of the chutes, usually above roof level this ventilator maintains a smooth flow of  fresh air within the refuse chute. It normally changes the air by approximately 50 times per one hour. The foul air exhaust fan helps prevent the escape of any bad odors or explosive gases released by aerosols etc, through refuse hoppers or into the refuse room.

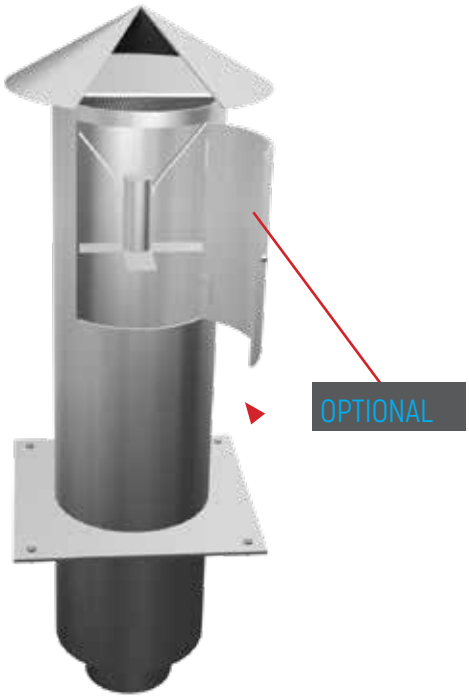


## Technical Specification

The fan from SFSP has air displacement 1820 $m^3/h$. Fan motor, Class H tropicalized continuously rated, 1300 RPM.

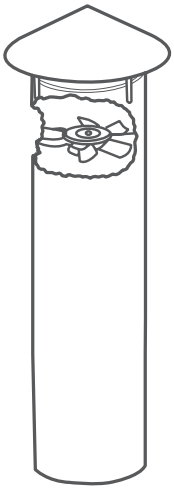

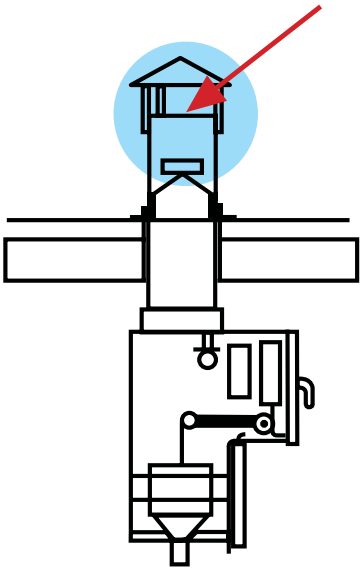

## 2 SOLENOID VALVE

Electrically operated valve controlling the flow of water to the sanitizing unit.

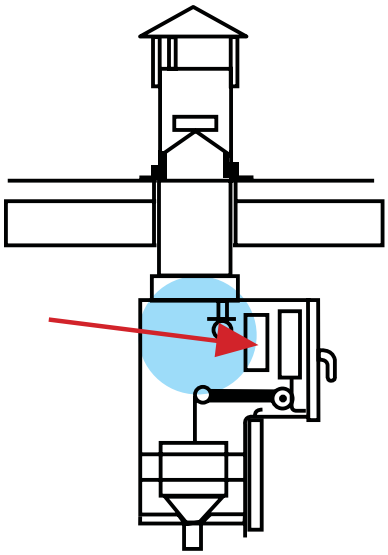

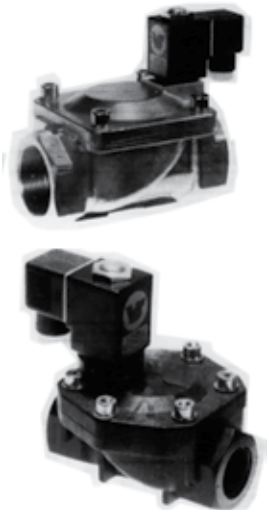

| Description | Solenoid Valve |
|---|---|
| Quantity | One Unit per Chute |
| Location | Behind Access Door |

## 3 DISINFECTING & SANITIZING UNIT

It is part of the automatic cleaning system of the chute, the sanitizing unit mixes soap along with the water where by the interior surfaces are sprinkled with water from alternate floors by sprinklers of Capacity.
It is recommended for use with every chute installation where proper operation and maintenance of the sanitizing unit reduces the immersion of strong odors and germs.

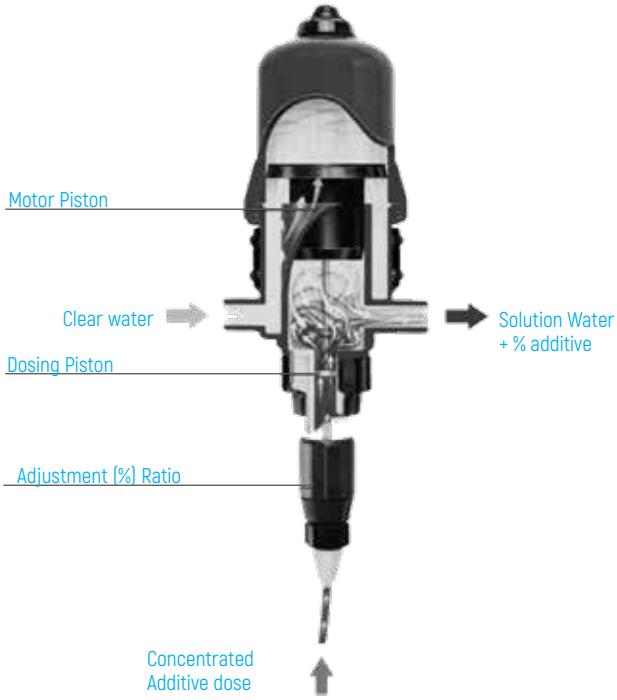


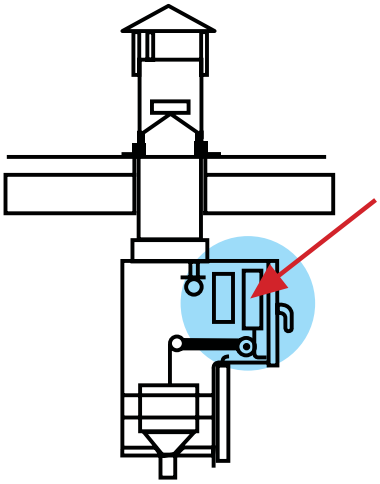

| Description | Disinfecting & Sanitizing Unit |
|---|---|
| Quantity | One Unit per Chute |
| Location | Behind Access Door |

## 4 ACCESS DOOR

Access door is located below the vent tube on the last floor. It is used for accessing the equipment in case of maintenance or revision of the chute. When opening the access door, the equipment located inside consists of the motor unit, solenoid valve, brush, disinfecting and sanitizing unit, designed to give manual or automatic brushing of the internal surface of chute.

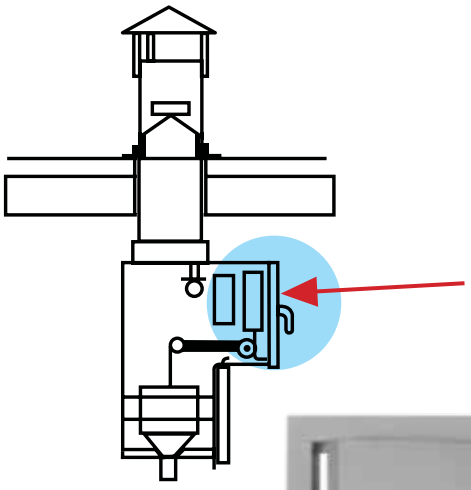

| Description | Access Door |
|---|---|
| Quantity | One Unit per Chute |
| Location | Last floor (Mechanical Room) |

## 5 CLEANING SYSTEM & BRUSHING DEVICE

Chute cleaning system specifically designed to clean the total vertical length of the internal surface of all chutes, where by it includes brush unit and motor unit.

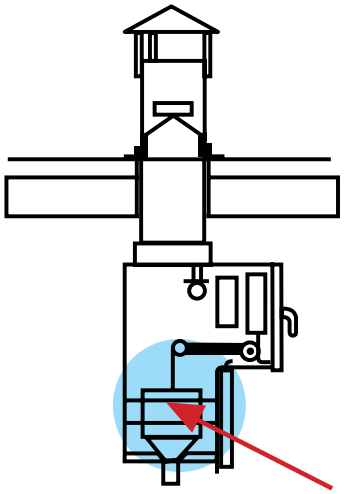


| Description | Motor Unit |
|---|---|
| Quantity | One Unit per Chute |
| Location | Top of Chute |

| Description | Brushing Unit |
|---|---|
| Quatity | One Unit per Chute |
| Location | Attached by cable or wire to motor axel |

## 6 CONTROL PANEL

Controls the entire automated systems within the chute; operates the cleaning system, controls the function of electro-magnetic door locks with the presence of an emergency button which isolates electricity and stop all the running functions.


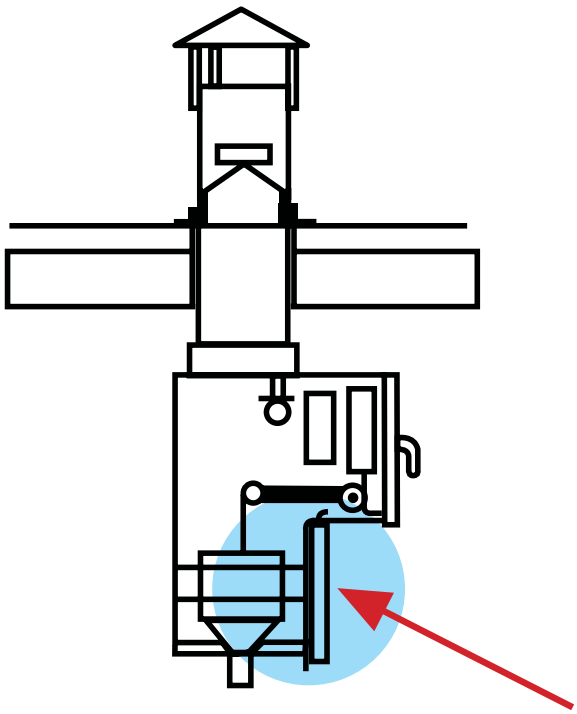

| Description | Access Door |
|---|---|
| QUANTITY | One Unit per Chute |
| LOCATION | Below Access Door or at ground Floor |

# 7 INTAKE THROAT

For each floor there is an intake throat for the hopper door...

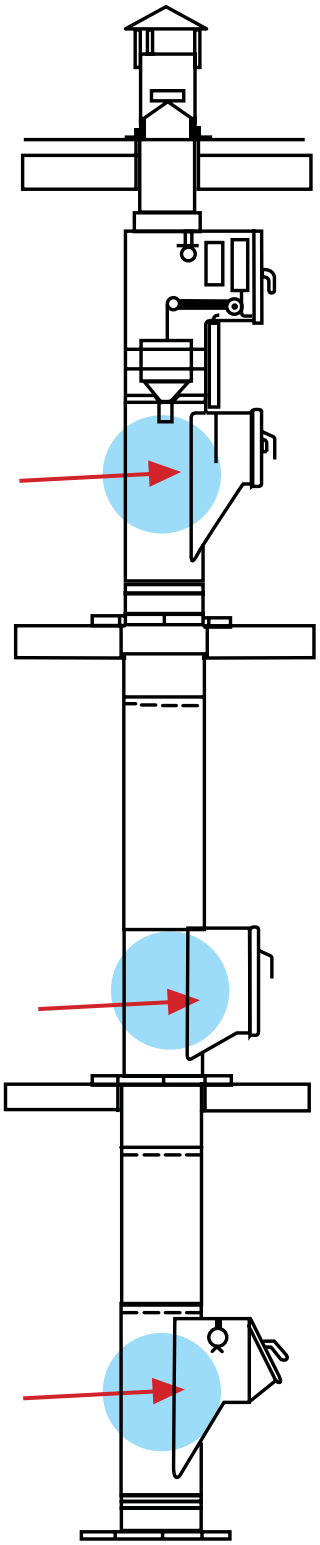

| Description | Intake Throat Cylinders |
|---|---|
| LOCATION | Through the Chute Height |

# 8 HOPPER DOOR

For each floor there is an intake throat for the hopper door...

Hopper doors are provided in the service room on each floor and are designed to eject loose or bagged refuse (discharge garbage) directly into a refuse chute or a container. Hopper doors have an effective self-sealing system.

### General

SFSP refuse hoppers are supplied with SFSP refuse chutes or supplied for separate fitting as independent or replacement hoppers. Designed and can be eject loose or bagged refuse directly into a refuse chute or a container.

### Materials and manufacture

Factory fabricated with a robust welded steel construction. The double skinned satin stainless steel facings have a special fire resistant core giving a 1 1/2 hour fire rating.

### Finish

Base and side cheeks from epoxy powder coated mild steel sheet.
Door facings in stainless steel.

### Operation

Hopper door pivots on an anti vandal hinge and is counter balanced to be self closing and self sealing against a fire resistant seal. SFSP hoppers are specially designed to prevent blockages inside refuse chutes.

### Application

For use with refuse chutes of 500, 550, 600, 700, 800, and 900mm internal diameter or as independent replacement hoppers.

### Hoppers comply with BS 476 and BS 5588

Smoke resistant : meets BS 476 section 31.1
Fire resistant : meets BS 476 part 22, section 6
Flush fitting : in accordance with BS 1703 6.3.3.5
Self closing : hopper door quietly and safely self closes after every operation in accordance with BS 1703 6.3.3.4
Hopper doors are made out of stainless steel or primed enameled steel.

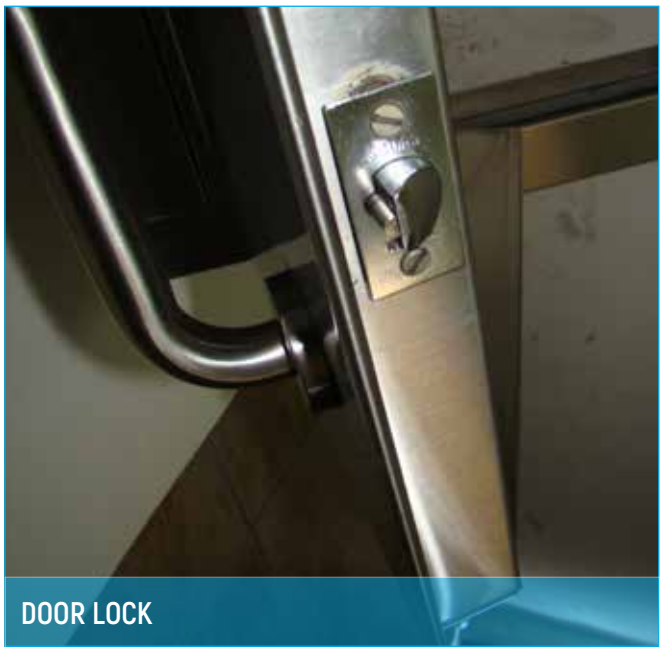

DOOR LOCK

LAMP

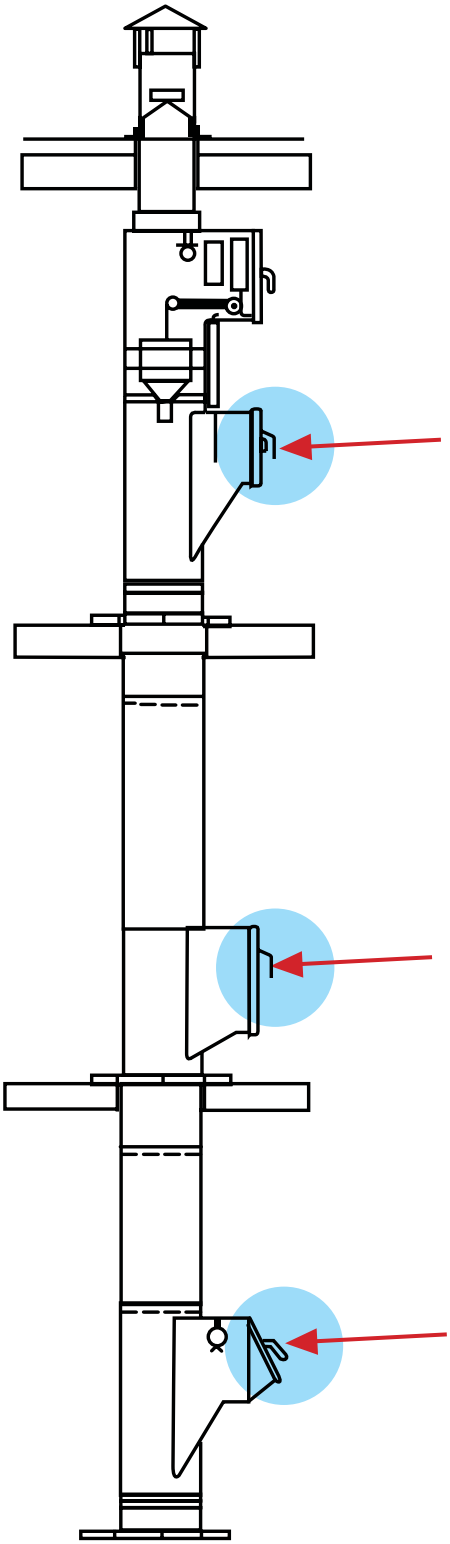

## Chute hopper doors are available in different sizes but commonly used sizes are:

| Chute Diameter | Lengths | Width |
|---|---|---|
| 500 mm | 450x450 mm (18"x18") | 450x450 mm (18"x18") |
| 550 mm | 450x450 mm (18"x18") | 450x450 mm (18"x18") |
| 600 mm | 500x550 mm (20"x22") | 450x450 mm (18"x18") |
| 700 mm | 600x900 mm (24"x36") | 600x900 mm (24"x24") |
| 800 mm | 600x900 mm (24"x36") | 600x900 mm (24"x24") |
| 900 mm | 700x950 mm (28"x36") | 700x950 mm (24"x24") |

| Description | Hopper Doors |
|---|---|
| LOCATION | Through the Chute Height |

# ELECTROMAGNETIC DOOR LOCK (ELECTRIC INTERLOCK)

## Introduction

Electromagnetic door locking systems are used to enhance the safety of garbage and linen disposal chute systems; although not required by law, they considerably improve and ensure proper operation of intake doors.

## Application

Electric latches can be incorporated in tipping hopper and side-hinged door fixtures; they can be coupled to warning light indicators, signal light indicators, smoke and fire alarms so that the doors remain closed in an emergency situation. Coupled with timers they can be used to control and dictate operating hours of the chute system. Door control is made at the central switchboard so that when one door is open, all others remain closed.
This arrangement prevents injury to operating personnel by a falling bag should the chute be used simultaneously at two different levels in disposal, for instance.

## Design

Electromagnetic door locking systems are fitted under the filler frame on tipping hopper and bag intake doors. In the door leaf a falling latch is incorporated which can be opened in an emergency by a simple allen key.
The lock is operated via a green illuminated push button; a red indicator lamp signaling that the chute has no access. All components of a door locking system and the operating controls are connected during installation and the final connection to the power unit is done by the main contractor.

## Operating instructions

1- All doors shall be locked when the chute cleaning systems are in operation.
2- Doors can only be opened individually, a feedback contact preventing opening of other doors; an indicator lamp on the switchboard indicates that a door is open.
3- When all doors are locked it may be that the smoke detectors or fire alarms have been triggered.
4- When work is going on in the collection room, personnel safety should be ensured by closing all doors to the system via the switchboard.

## Supply requirements & specification

- Electro magnetic solenoid bolts.
- 220/240 volts. 50/60 Hz. 10 Amps max. or 120/240 volts. 50/60Hz 5 Amps max.
- Low power factor
- Pre-set timer. Electric supply as above
- Delay on/off. Range 5/200 seconds.

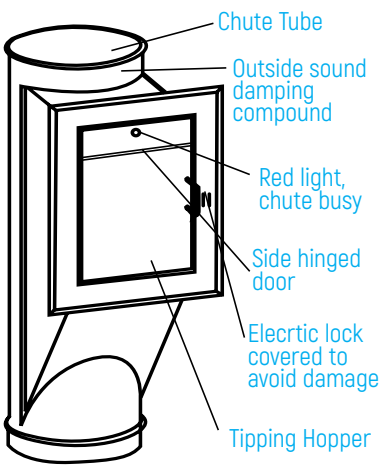


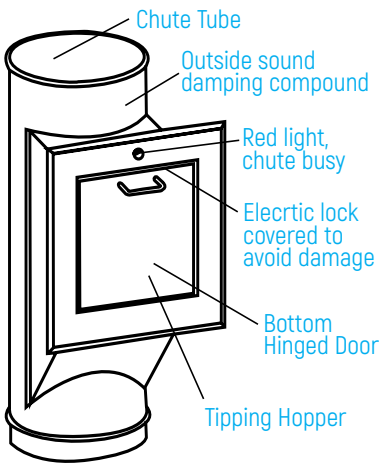

## 9 CLAMP RING & SUPPORTING FRAME

Cut, shaped and drilled from 35x35x3 mm or (other sizes are applicable for use) Mild steel angle with a rigid, welded construction. The frame holds a metal clamp band. The frame is rust proof for internal use and hot dip galvanized for external use.

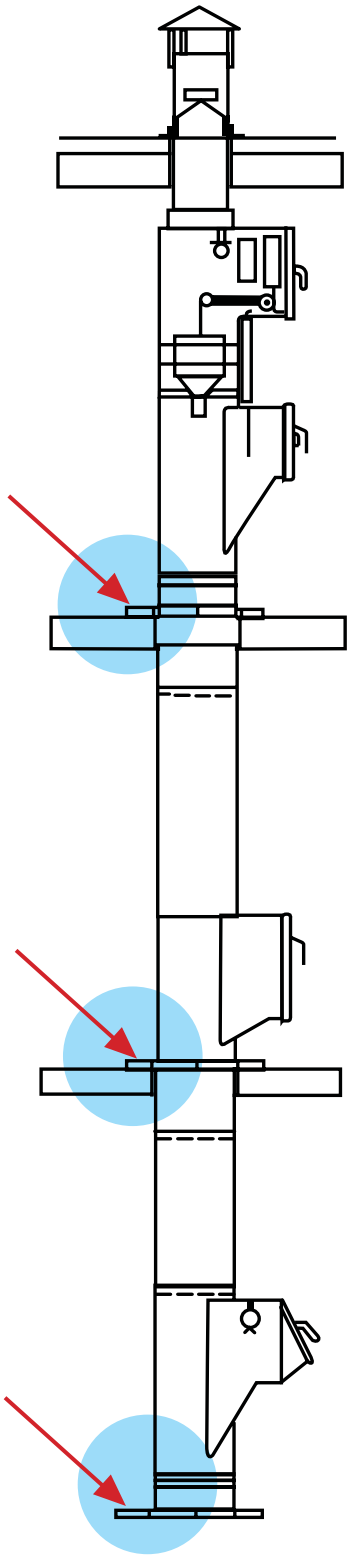

| Description | Clamp Ring |
|---|---|
| QUANTITY | One set per floor |
| LOCATION | At Each Floor |
| **Description** | **Supporting Frames** |
| QUANTITY | One set per floor |
| LOCATION | At Each Floor |

## 10 SWAGED JOINT

Used to join certain section of duct.

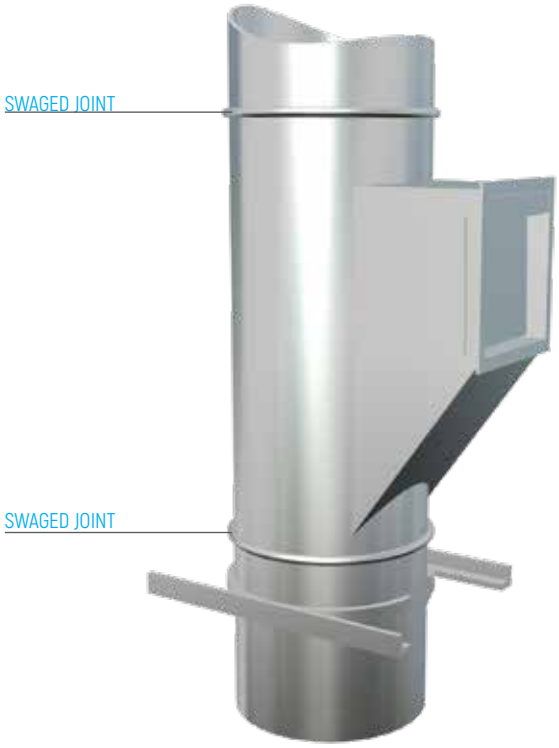


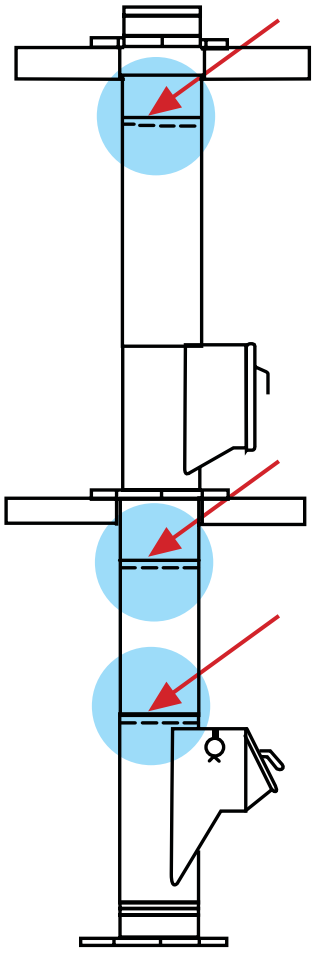

## 11 CHUTE TUBE & SOUND DAMPING

Chute Tube gives an unimpeded dumping of refuse within a chute, the best shape has proved to be circular.

### Sound Damping

All metal refuse chutes can produce, uncomfortable levels of noise. A factory applied coating of a proven sound dampening compound will dramatically reduce noise level produced by resonant vibrations in metal refuse chutes. Factory applied at the same thickness as the metal substrate or more and over the total area of the exterior surface of the refuse chute, (except refuse, hopper face and side hinged door faces).

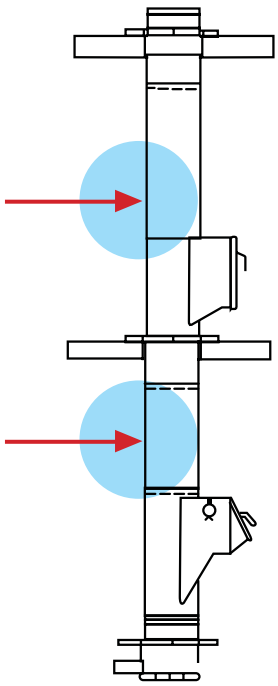

| Description | Chute Tubes SS 304, 1.5 mm thickness |
|---|---|
| LOCATION | Through the Chute Height |

# 12 SPRINKLERS

## CLEANING & FIRE SPRINKLERS

### Cleaning Sprinklers

Spray head located  in all floors behind the door opening for cleaning issues.

### Fire Sprinkler:

Glass bulb sprinklers installed for fire detection inside the chute in each floor.
1/2" IPS, 68°C (165°F).
Glass Sprinklers can be used in conjunction with a normal water supply at a pressure of up to 8 bar.

### Smoke Detection System:

This system shall be provided by the fire alarm subcontractor.

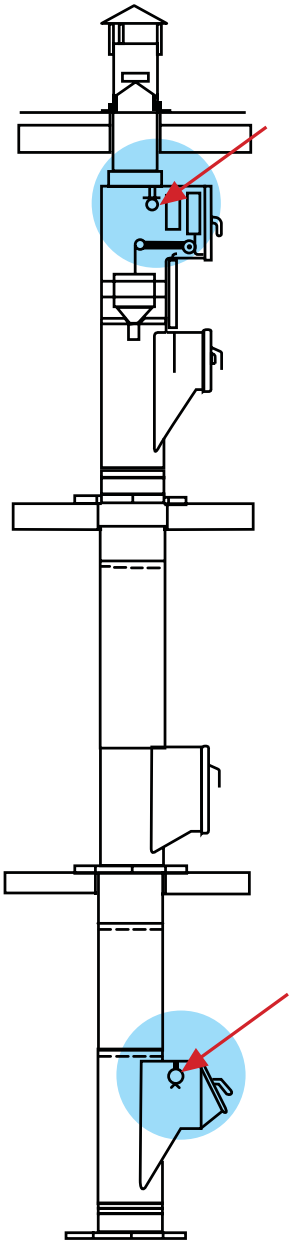

Spray nozzle used for cleaning the chute

A fire sprinkler

| Description | Spray Nozzle |
|---|---|
| LOCATION | Inside the Intake Throat |
| **Description** | **Fire Sprinklers** |
| LOCATION | Inside the Intake Throat |

# 13 FIRE CUT OFF DOOR

Fire Cut Off Door has a horizontal rolling door held by a spring on each side connected to a fusible link. In case of excessive heat (or fire) the link gets fused at 165° F (68°C) causing the door to roll shut. The discharge is 1.5 hours fire rated.

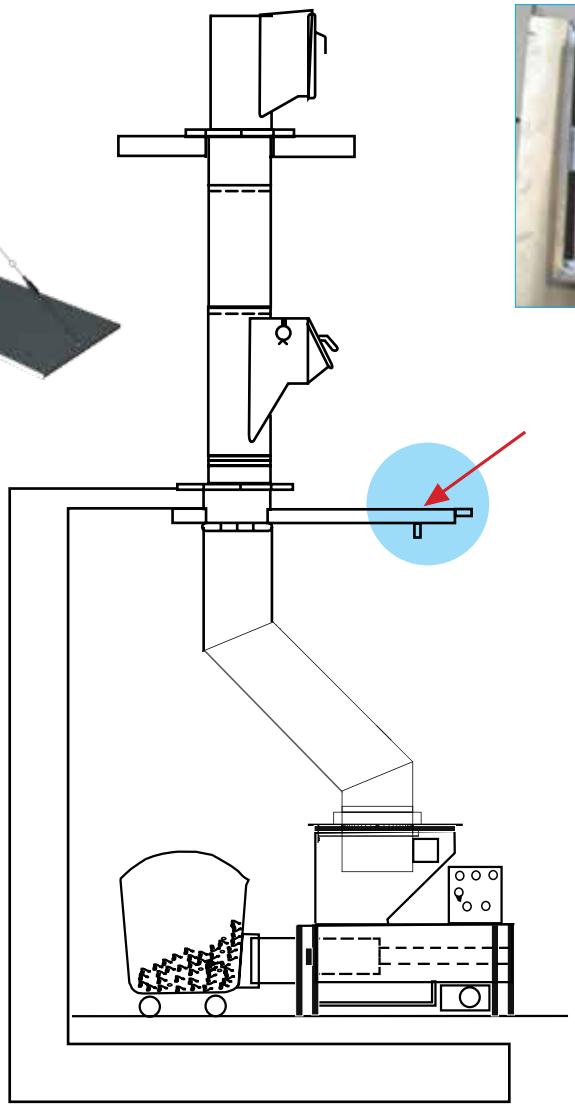

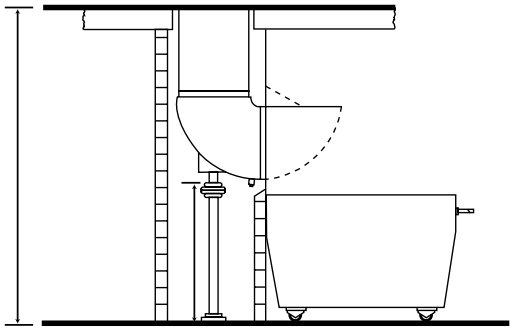

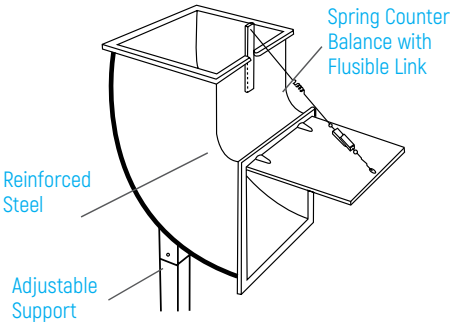


## Type 'C' Automatic Fire Shutter Door

This type is widely used in both garbage & linen chutes. It has a horizontal rolling door held by springs on each side connected to a fusible link. In case of excessive heat (or fire) the link gets fused at 165°F (68°C) causing the door to roll shut. The discharge is 1.5 hours fire rated.

The Automatic Fire Shutter Door also has a manual closing facility and can be used in certain location as both a fire shutter-door and a manual cut  off door.

Fire Cut Off Door has a horizontal rolling door held by a spring on each side connected to a fusible link. In case of excessive heat (or fire) the link gets fused at 165° F (68°C) causing the door to roll shut. The discharge is 1.5 hours fire rated.

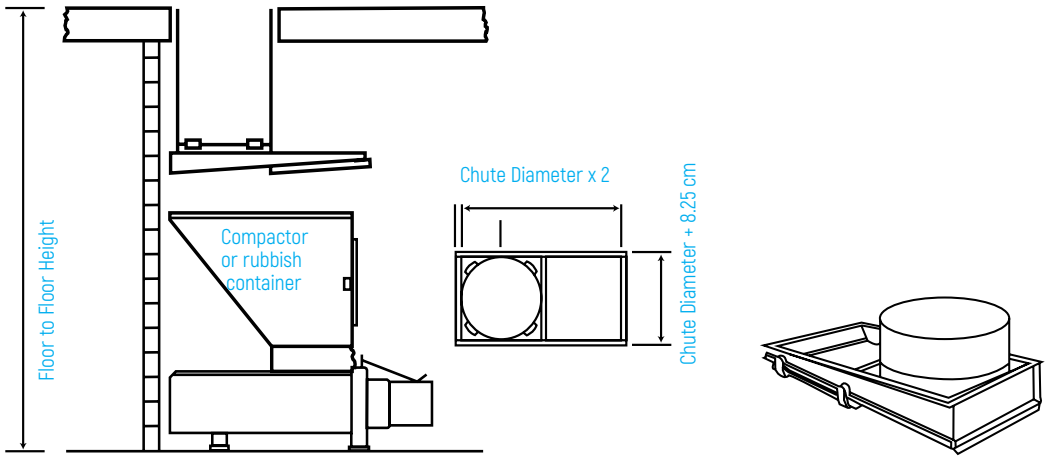


## Type 'D' Top Hung Automatic Fire Door

Designed for use where it is not possible to fit a standard automatic fire shutter door. The top hung door gives the same 1.5 hours fire protection, but without the same degree of operator safety (Safety fencing is recommended).
Operation is by the top hinged counter balanced door pulling against a fusible link. In case of fire the door drops shut and is held closed by two retaining catches. Suitable for use with 600mm and 800mm linen chutes.

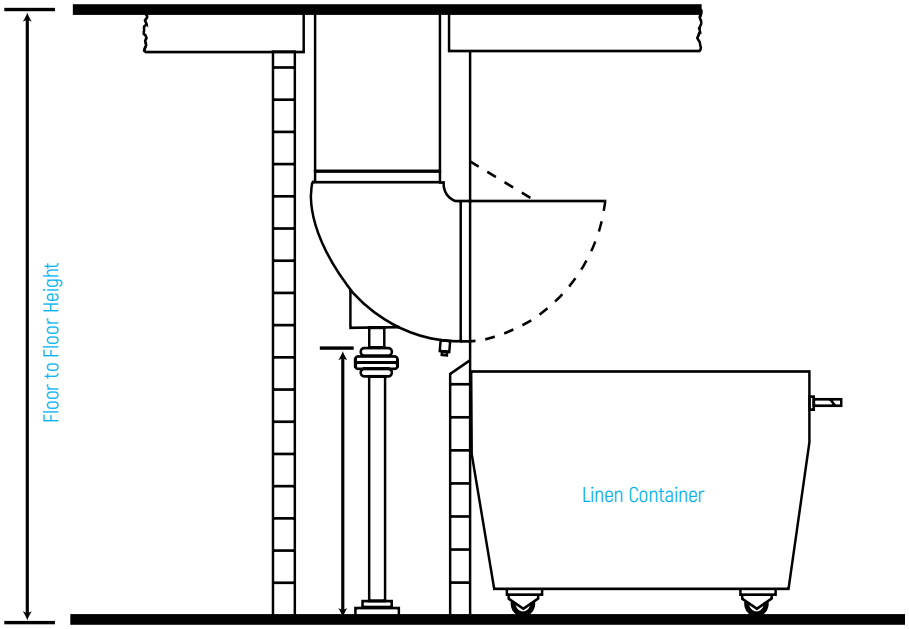


## Manual Cut-off Door

Shuts and cuts off chute for cleaning, removal of containers or maintenance of refuse compactors or shredders.

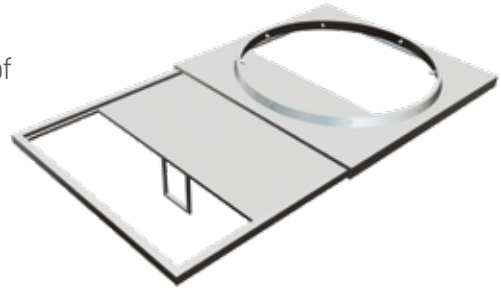

Shut off gate / long form

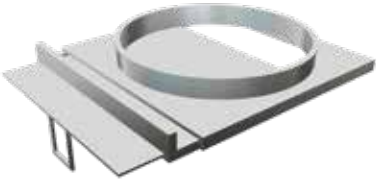

Shut off gate / short form

# 14 ELBOW

## Offsets

Factory fabricated from the same material as the refuse chute, but in a heavier gauge to withstand the impact of falling bags. Offsets should not be less than 45° from the horizontal. Offsets are fabricated to all diameters of refuse and linen chutes provided by SFSP.

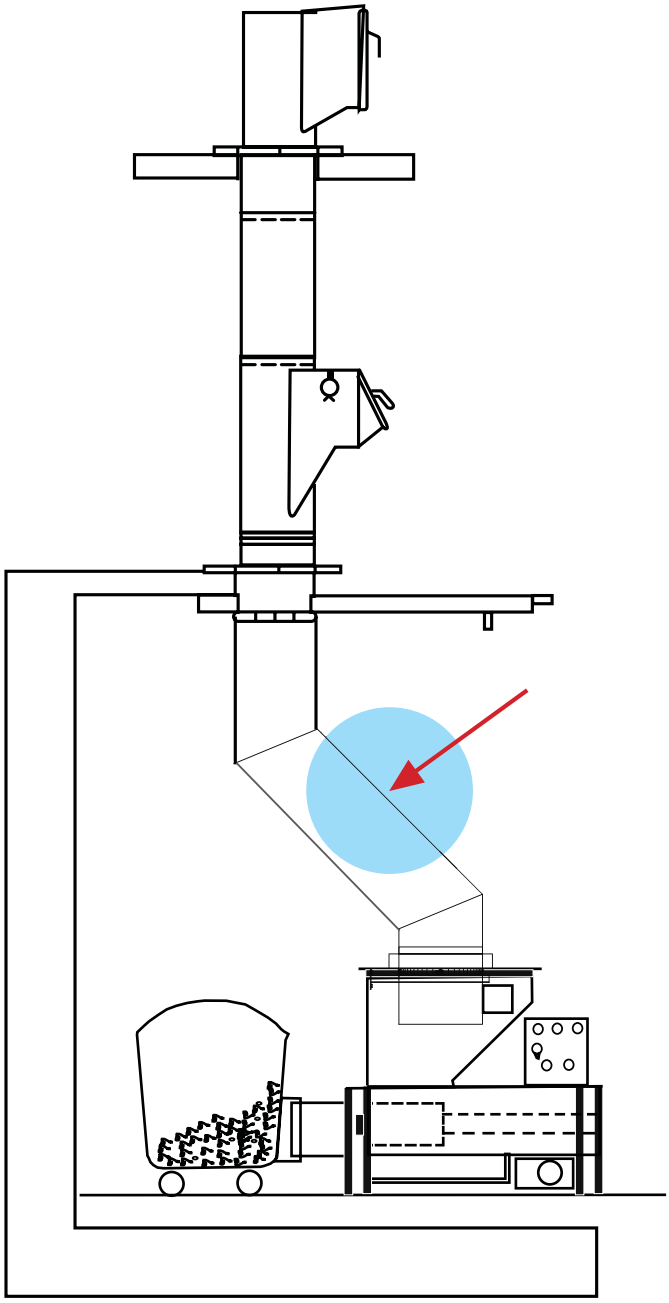

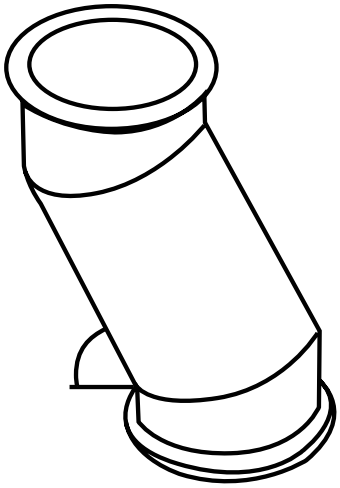

# 15 GARBAGE CONTAINER

## TYPE MGB

**Capacity:**
1.1m$^3$

**Material:**
Hot-dip galvanized steel (DIN 30700)

**Specifications:**
- Body and lid hot dip galvanized
- Form stability through slotted all around running tube profile
- Dome lid hot dip galvanized vaulted and reinforced
- Special tension spring for easy opening
- Remains in 2 positions with an automatic locking device
- Moulded rubber hand protection
- Frontally operated central locking
- Water drain for cleaning purposes
- 4 swivel wheels 3600 maintenance free ball bearing with solid rubber tires
- Carrying capacity per wheel 400 kg
- Lateral central locking device of two front wheels

**Options:**
- Instead of central locking, brake on single wheel
- Towing gear with trailer bracket and coupling, heavy wheel implemention
- Colour coded lid
- Slot opening in lid for recycling waste
- Lid locking device
- Special body treatment for collecting hazardous waste (filling stations, vehicles workshops etc.)

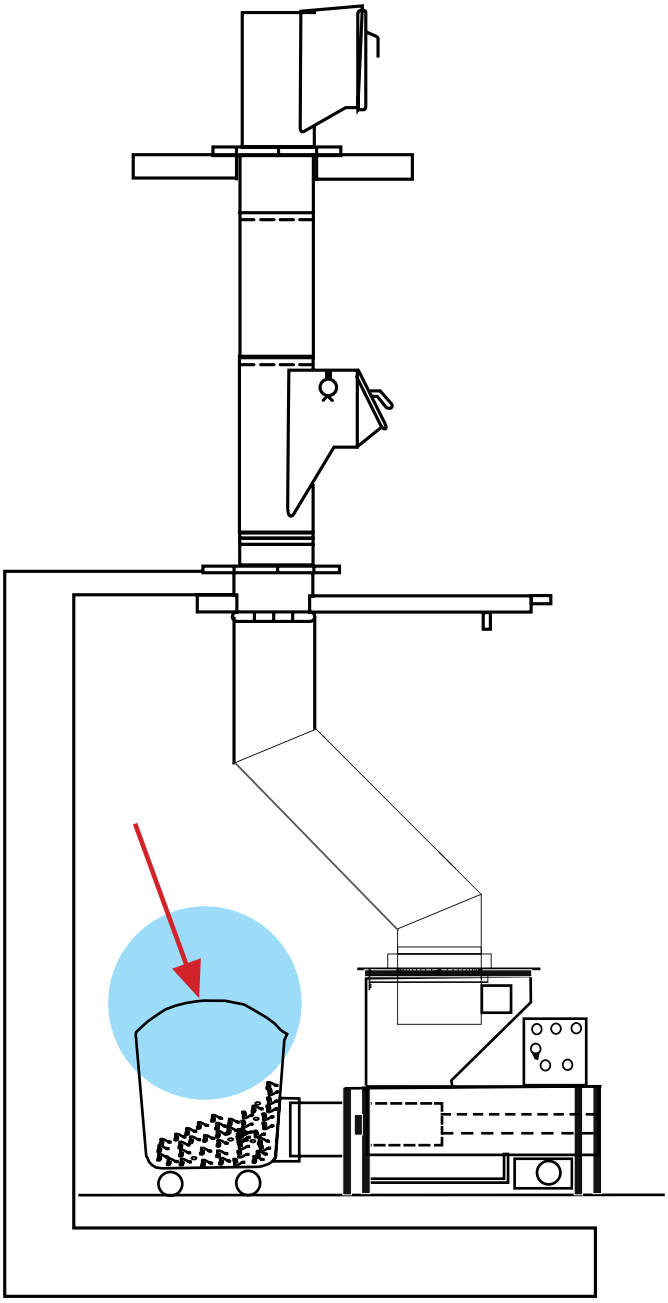

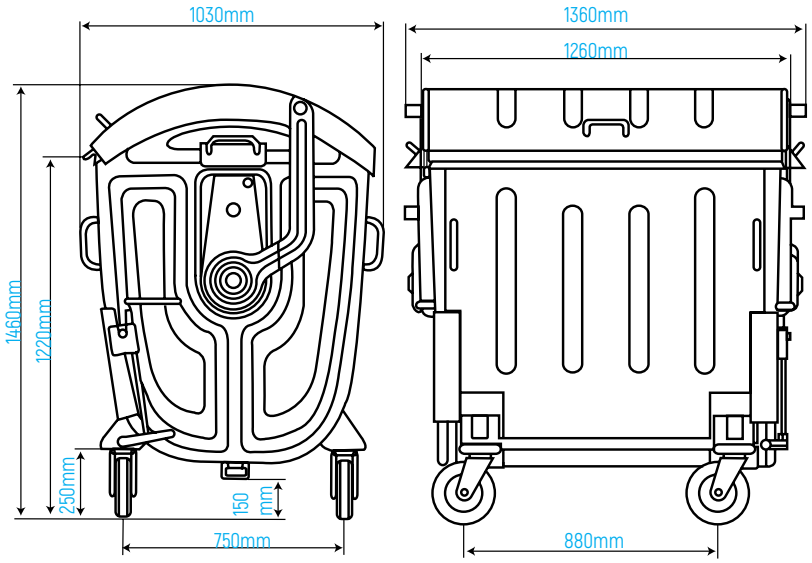


Frontal Operation of
Central Locking

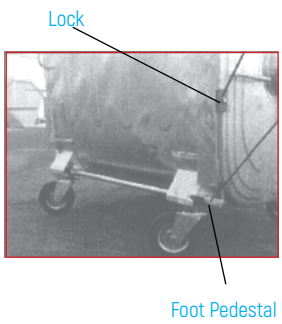

## TYPE MGD 2.5

**Capacity:**
2.5 $m^3$

**Material:**
DIN 30738 hot-dip galvanized steel

**Specifications:**
- Hot dip galvanized body
- Formstability through box-profile framework
- Strengthening ribs at body, bottom reinforced with stable wheel cases
- 2x360o swivel wheels with direction fixing device at the front 200 mm diameter
- 2x360o swivel wheels at the back with single wheel stop 200 mm diameter
- Galvanized sliding lid
- Lateral and rear sliding lid

**Options:**
- Skids instead of wheels
- 2 fixed wheels 200 mm diameter at the front
- Central brake for the rear swivel wheels
- Interlocking device on the rear steering wheel
- Towing gear with heavy-duty-wheels for collective - transportation
- Reflex warning-foil at the corners
- Owner-stamping in the lid
- Slot-opening in the fore lid
- Locking device of the fore lid
- Locking device for the rear lid for controlled collection with rear lifts
- Horizontal sliding grip at the rear
- RAL color painting on zinc coating primer

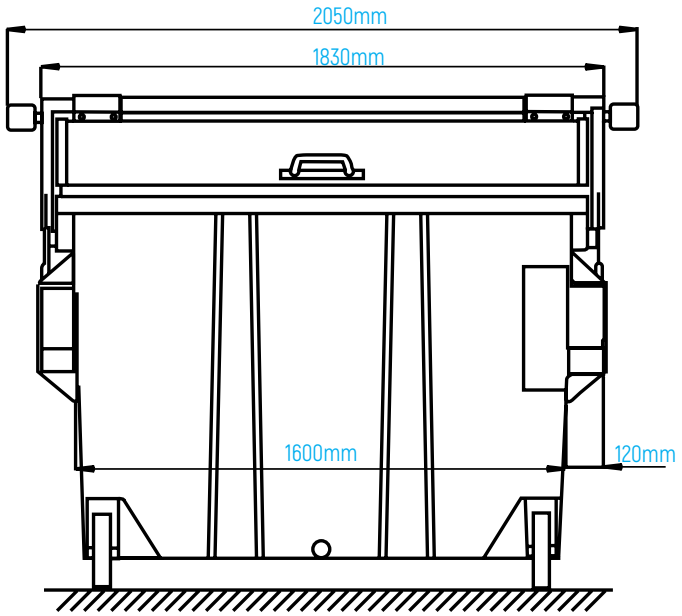


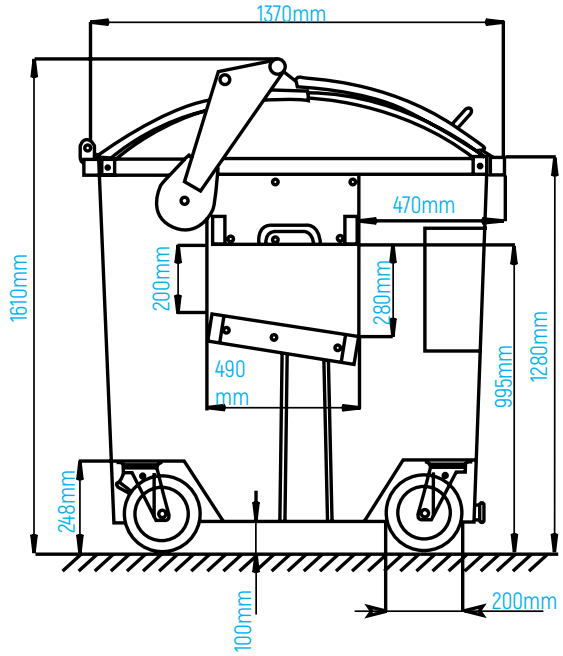


## Interlocking device of the rear swivel wheels:

The operating lever is optional to the waste disposals at the receptacle left or right behind. This lever is welded with a spindle which connects the brake equipment of the two steering wheels.

## Essential advantages of this system:

1. Lateral order of the lever-short way of the worker of the vehicle to the activity-lever.
2. Trouble-free activity of the interlocking device under optimal place utilization of the receptacle (House-walls or alike)

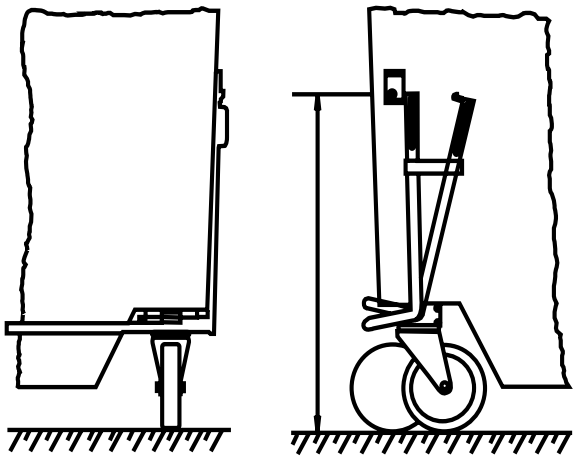

## TYPE MGD 4.5

### Capacity:
4.5 $m^3$
Material:
Galvanized steel

### Specifications:
- Hot dip galvanized body
- Formstability through box-profile frameworks
- Strengthening ribs at container body, bottom reinforced and stable wheel cases
- 2 fixed wheels at the front 250 mm diameter
- 2x360o swivel wheels at the back with single wheel stop 250mm diameter
- Galvanized sliding lid
- Lateral and rear slide grips with steering handles

### Options:
- Skids instead of wheels
- 4x360o swivel wheels instead of 2 fixed wheels at the front, with direction fixing device at the front wheels
- Interlocking device on the rear steering wheel
- Towing gear with heavy-duty
- Wheels for collective-transportation
- Reflex warning-foil at the receptacle-corners
- Owner-stamping in the lid
- Slot-opening in the fore lid
- Locking device of the fore lid
- Locking device of rear lid for controlled collection with rear lifts
- Horizontal sliding grip at the rear
- RAL color painting on zinc coating primer


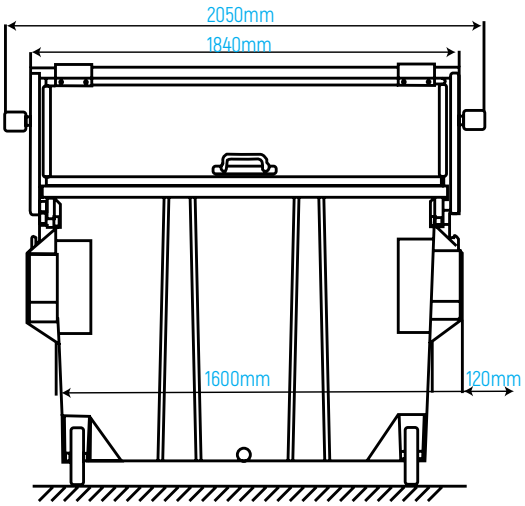


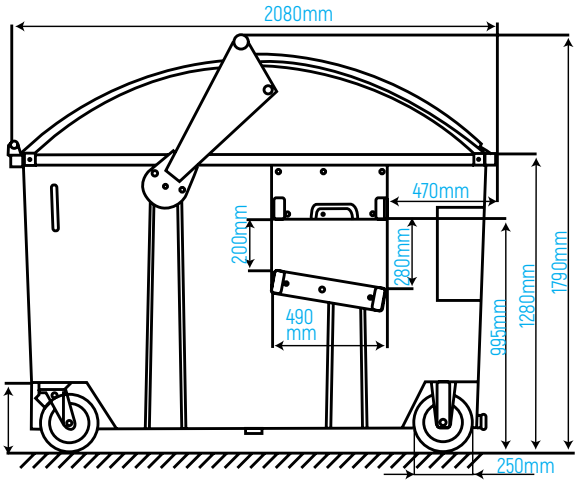

## TYPE MGC

### Capacity:
1.53 $m^3$

### Material:
Powder coated

### Specifications:
Refuse container capacity 1.53 m3.
- All made of high tensile steel ST52-3, 2mm thick, reinforced at front top edge by 30mm diameter round bar.
- Top edges surrounded by U shaped channels (3mm thick).
- Four heavy duty swivel caster wheels of 8" diameter two with brake and two without brake.
- Continuous inside welding.
- Two coats of epoxy primer and two coats of final color on request.
- Container without cover.
- Made to be lifted by the refuse compactor.

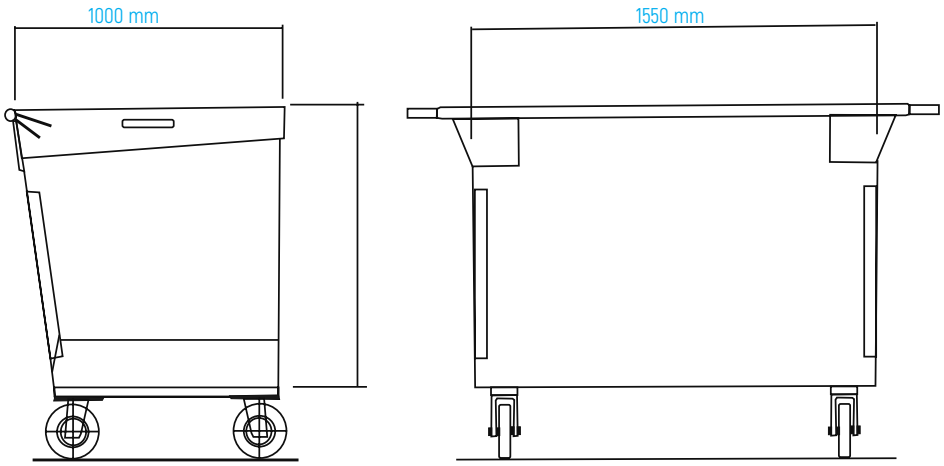

# TIPPING TRUCK CONTAINER SKIPS

## TYPE HM

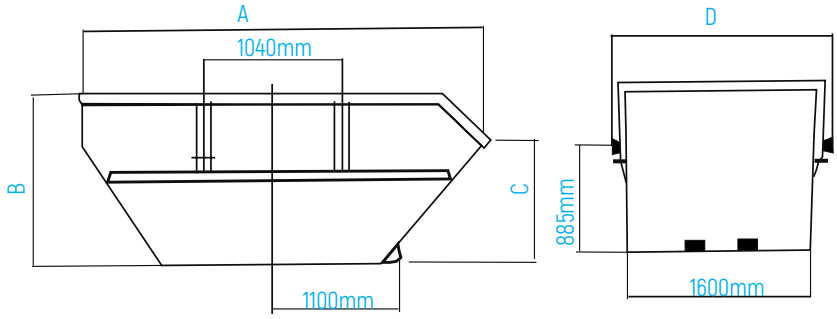


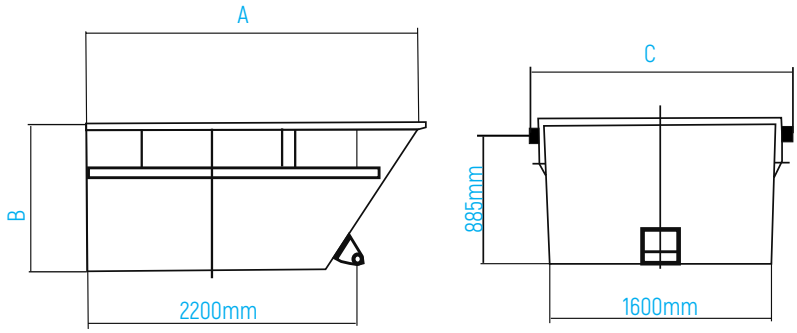


| Type | HM 1 | HM 2 | HM 3 | HM 4 | HM 5 |
|---|---|---|---|---|---|
| Capacity | 4m³ | 7m³ | 10m³ | 12m³ | 44m³ |

| Dimensions | HM 1 | HM 2 | HM 3 | HM 4 | HM 5 |
|---|---|---|---|---|---|
| A | 2950 | 3370 | 4100 | 4100 | 2950 |
| B | 1100 | 1500 | 1700 | 2000 | 1300 |
| C | 800 | 840 | 1100 | 1100 | 1880 |
| D | 1870 | 1850 | 1850 | 1840 | |

# 16 COMPACTORS

## TYPE H 150

1. Operation: Automatic hydraulically operated.
2. Operating Pressure: 40, 000 lbs.
3. Compaction: Compacts refuse 15-20% of original volume.
4. Packaging: Packages refuse directly into heavy gauge plastic sacks or containers.
5. Capacity: 750kg/hr.
6. Compaction Chamber: 0.20 m3 with a machine cycle time of 40 seconds giving a theoretical compaction volume of 8 m3/hr.
7. Construction Compactor: Strengthened 10mm steel plate.
8. Compacting Ram: The compacting ram is made from 6mm plate with the face of the ram increased to 25mm plate to effectively handle the 18 ton pressure.
9. Compaction chamber: Shall have hardened steel shearing blades.
10. Hydraulic Power Pack: Pre-packed fully connected integrally mounted system to develop over 3000 PSI. Normal operating pressure 1000 PSI (Approximately).
11. Motor: 40 Second cycle. Time 4 kw-1450 RPM.
12. Pump: Pressure balanced, external oval gear type.
13. Electrical control: Housed in a keyed access cabinet.
14. Other Feature: Repeat hammer action and automatic attendant alarm.

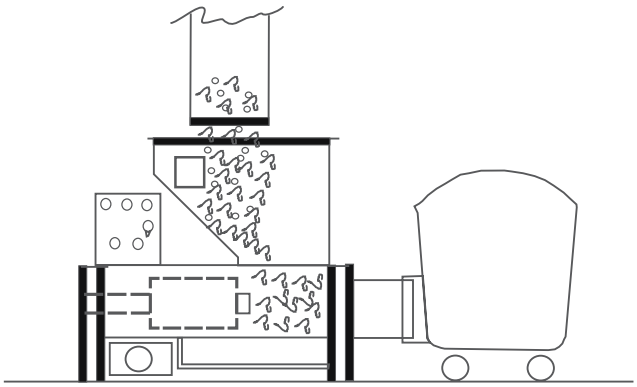

Refuse fed manually or falling down the chute directly into the compactor trips the photo electric cell. The compaction cycle commences

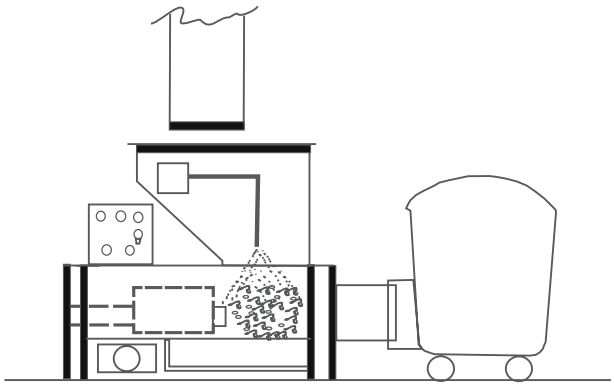

Refuse is automatically sprayed for with strong disinfectant to protect against insects and reduce any airborne smells.

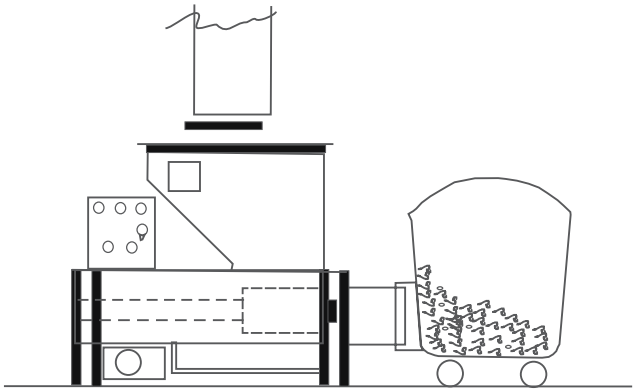

Compactor ram pushes refuse through shearing teeth and then through compaction chamber into heavy guage container.

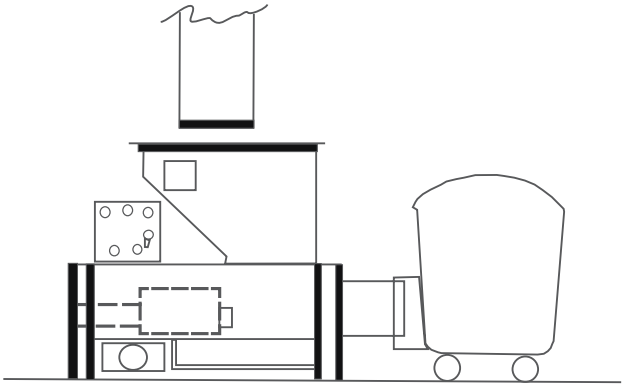

When the compactor is full the attendant unlashes container from compactor and wheels the container away. Fits empty container.

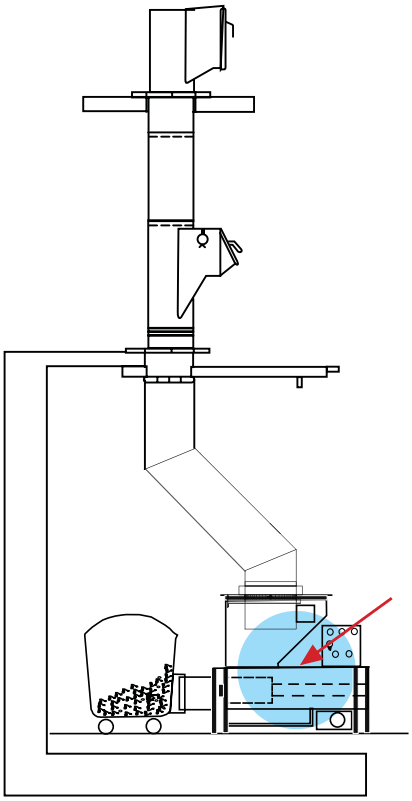

# GARBAGE CHUTES SORTERS

# DUO-SORTER

## OPTION A

## CONTAINER SIZE:

1.100 ltr

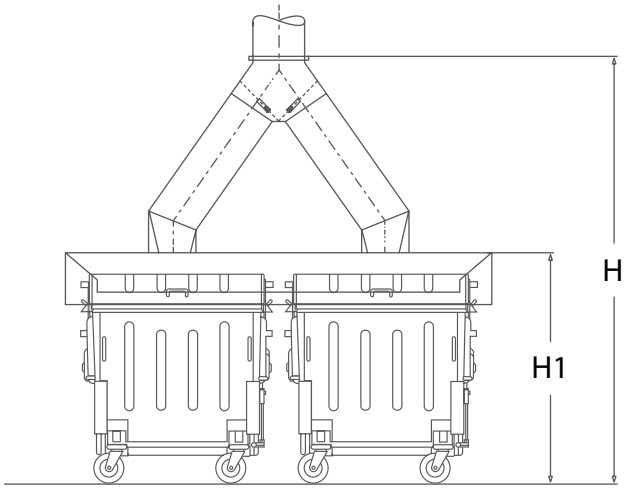


## TOP-VIEW A1

container handling area
in front of the system

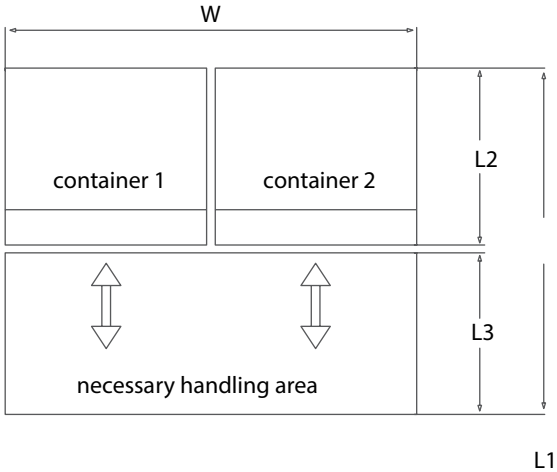


## TECHNICAL DATA:

| Dimensions | H | W | h1 | L1 | L2 | L3 |
|---|---|---|---|---|---|---|
| Standard | min. 2.500mm | 2.800mm | 1.500mm | 2.300mm | 1.200mm | 1.100mm |

## TOP-VIEW A2

container handling area either left or right side of the system (or even both sides)

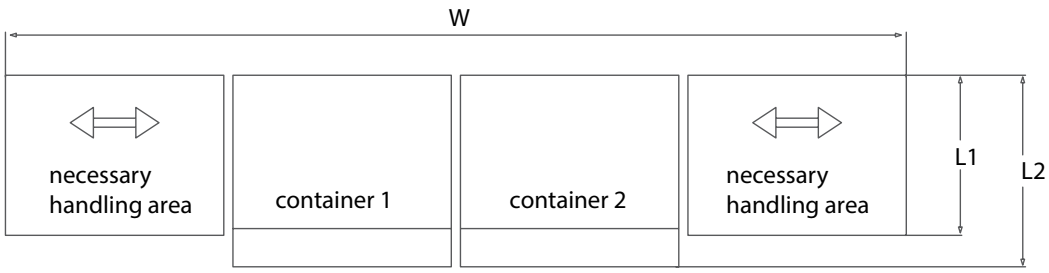


## TECHNICAL DATA:

| Dimensions | H | W | h1 | L1 | L2 | L3 |
|---|---|---|---|---|---|---|
| Standard | min. 2.500mm | 4.200mm | 1.500mm | 1.100mm | 1.200mm | 1.400mm |

# DUO-SORTER
## OPTION B

## CONTAINER SIZE:
1.100 ltr

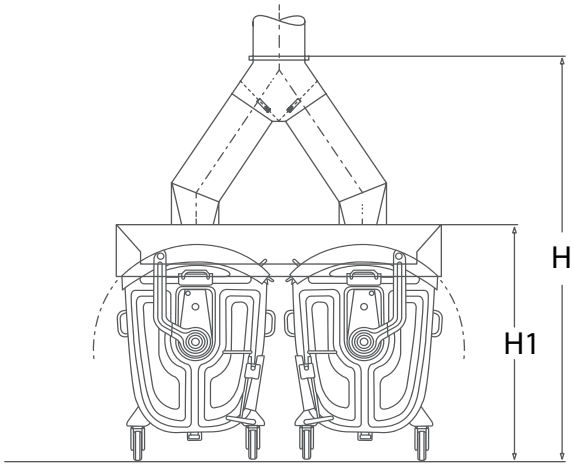


## TOP-VIEW B1
container handling area
in front of the system

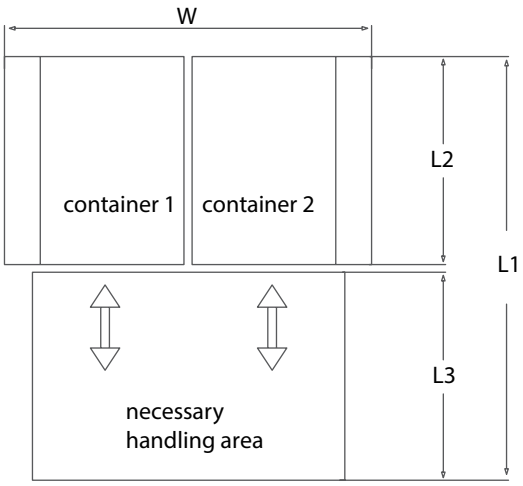


## TECHNICAL DATA:

| Dimensions | H | W | h1 | L1 | L2 | L3 |
|---|---|---|---|---|---|---|
| Standard | min. 2.500mm | 2.400mm | 1.500mm | 2.800mm | 2.400mm | 2.400mm |

## TOP-VIEW B2
container handling area either left or right side of the system (or even both sides)

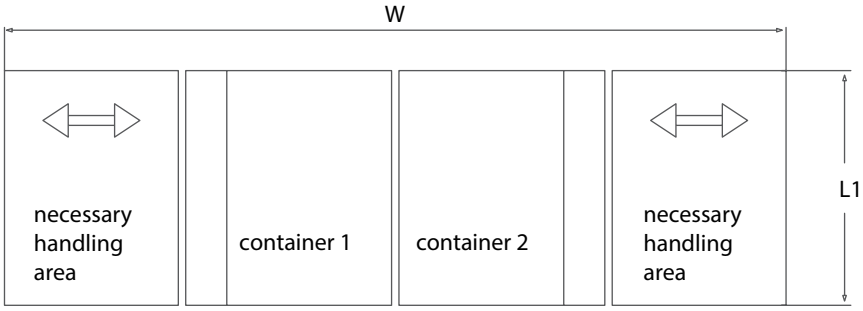


## TECHNICAL DATA:

| Dimensions | H | W | h1 | L1 | L2 | L3 |
|---|---|---|---|---|---|---|
| Standard | min. 2.500mm | 3.500mm | 1.500mm | 1.400mm | | 1.100mm |

# DUO-SORTER
## OPTION C1

## CONTAINER SIZE:
1.100 ltr

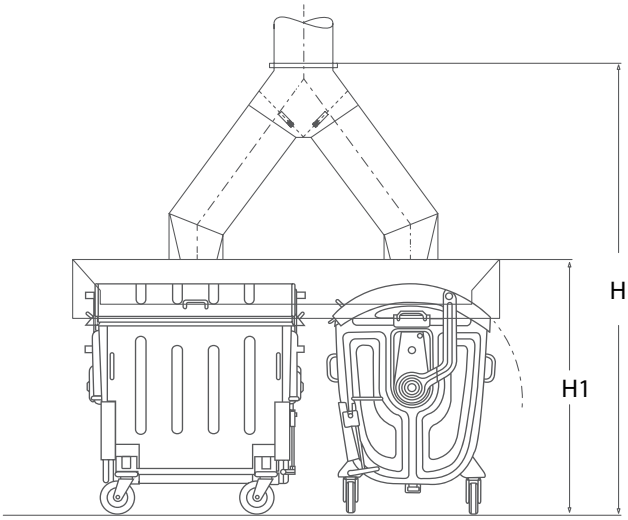


## TOP-VIEW C1
container handling area
in front of the system

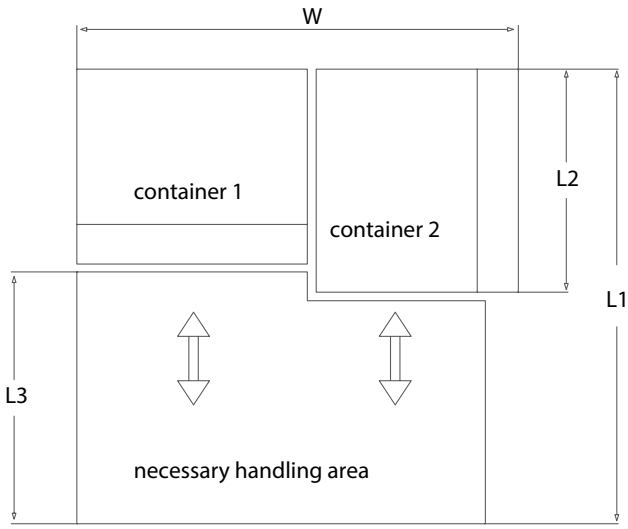


## TECHNICAL DATA:

| Dimensions | H | W | h1 | L1 | L2 | L3 |
|---|---|---|---|---|---|---|
| Standard | min. 2.500mm | 3.600mm | 1.500mm | 2.800mm | 1.400mm | 1.400mm |

# DUO-SORTER

## OPTION C2

## CONTAINER SIZE:

1.100 ltr

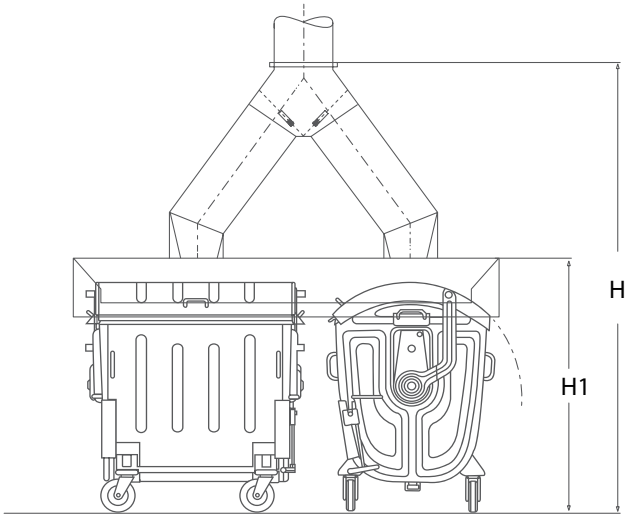


## TOP-VIEW C2

container handling area
in front of the system

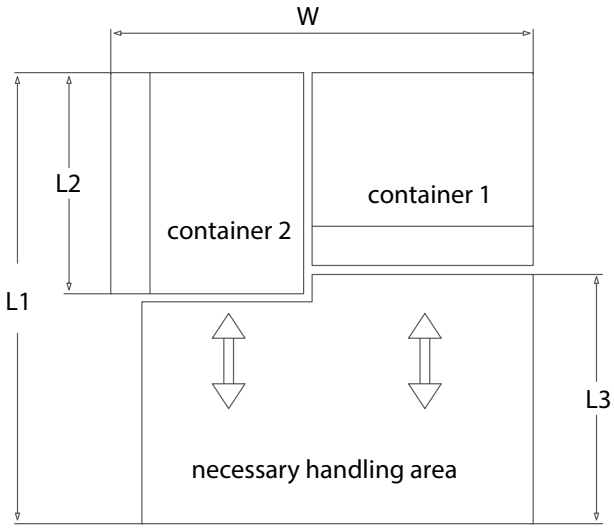


## TECHNICAL DATA:

| Dimensions | H | W | h1 | L1 | L2 | L3 | |
|---|---|---|---|---|---|---|---|
| Standard | min. 2.500mm | 2.600mm | 1.500mm | 2.800mm | 1.400mm | 1.400mm | |

# TRI-SORTER
## OPTION A

## CONTAINER SIZE:
1.100 ltr

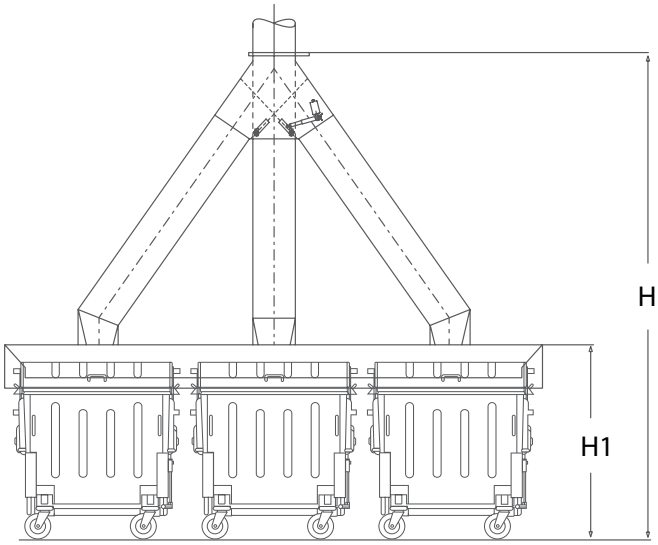


## TOP-VIEW A1
container handling area
in front of the system

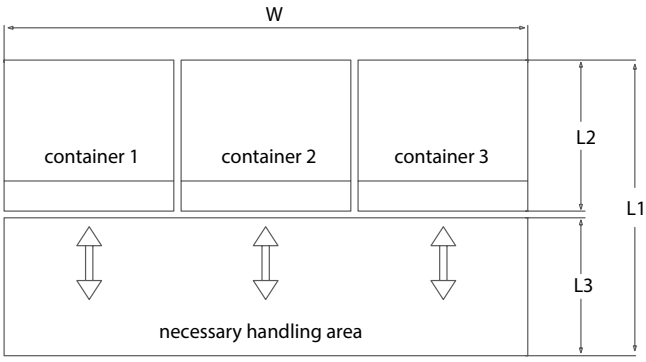


## TECHNICAL DATA:

| Dimensions | H | W | h1 | L1 | L2 | L3 | |
|---|---|---|---|---|---|---|---|
| Standard | min. 3.300mm | 4.200mm | 1.600mm | 2.300mm | 1.200mm | 1.100mm | |

## TOP-VIEW A2
container handling area left or right side of the system
(or even both sides)

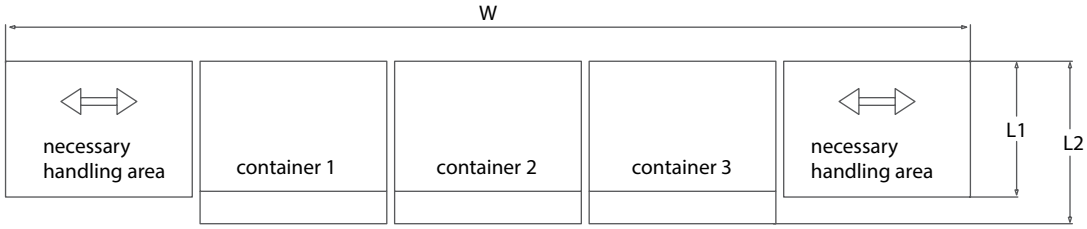


## TECHNICAL DATA:

| Dimensions | H | W | h1 | L1 | L2 | L3 | |
|---|---|---|---|---|---|---|---|
| Standard | min. 3.300mm | 5.600mm | 1.500mm | 1.100mm | 1.200mm | 1.400mm | |

# TRI-SORTER
## OPTION B

## CONTAINER SIZE:
1.100 ltr

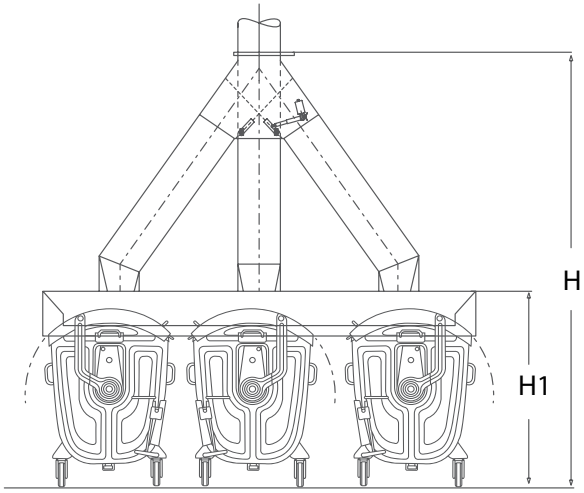


## TOP-VIEW B1
container handling area
in front of the system

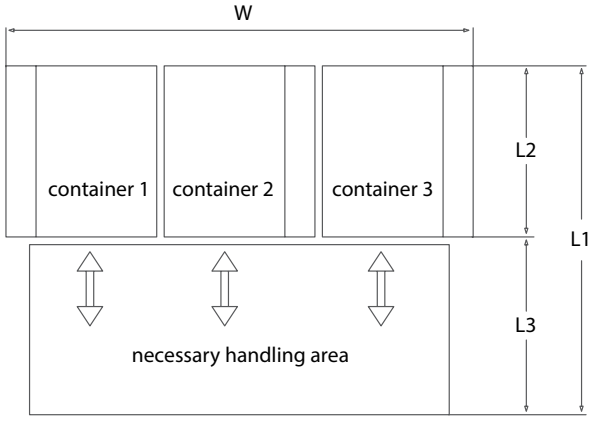


## TECHNICAL DATA:

| Dimensions | H | W | h1 | L1 | L2 | L3 | |
|---|---|---|---|---|---|---|---|
| Standard | min. 3.150mm | 4.100mm | 1.600mm | 2.400mm | 1.200mm | 1.200mm | |

## TOP-VIEW B2
container handling area left or right side of the system
(or even both sides)

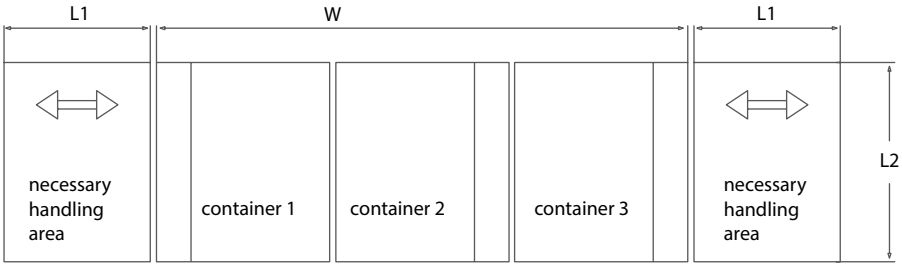


## TECHNICAL DATA:

| Dimensions | H | W | h1 | L1 | L2 | L3 | |
|---|---|---|---|---|---|---|---|
| Standard | min. 3.300mm | 4.100mm | 1.500mm | 1.100mm | 1.400mm | | |

# TRI-SORTER
## OPTION C1

## CONTAINER SIZE
1.100 ltr

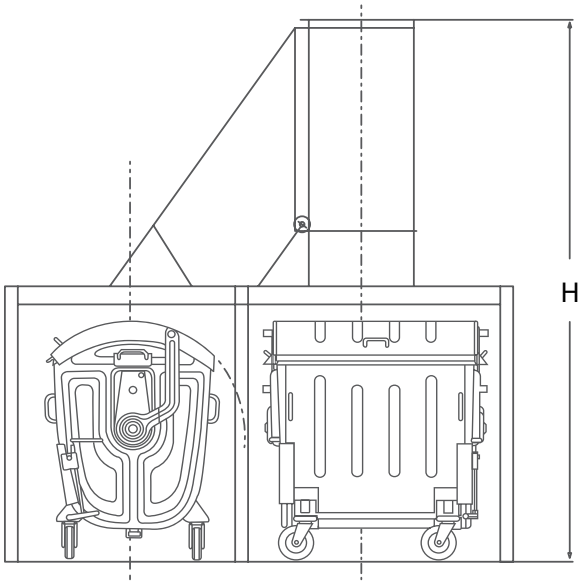


## TOP-VIEW C1
container handling area
in front of the system

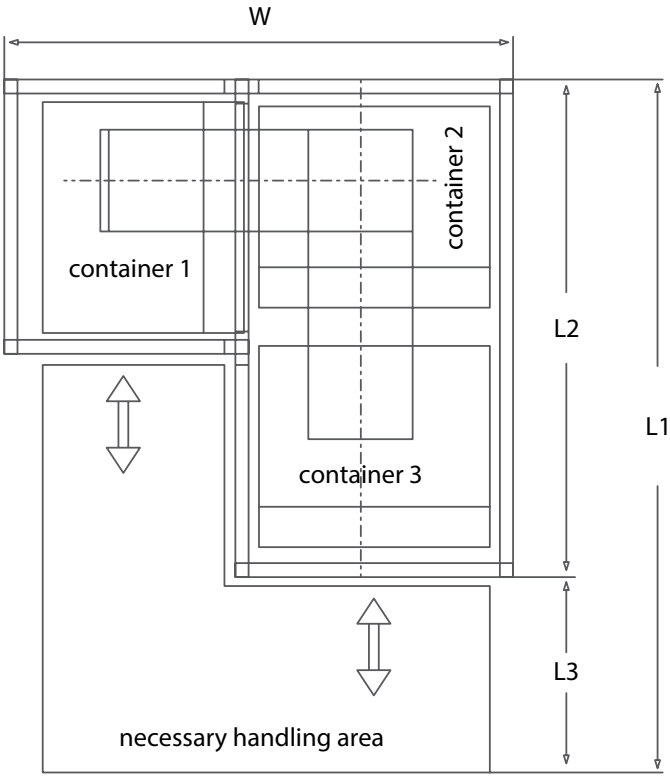


## TECHNICAL DATA:

| Dimensions | H | W | h1 | L1 | L2 | L3 |
|---|---|---|---|---|---|---|
| Standard | min. 3.100mm | 2.700mm | 1.600mm | 3.700mm | 2.500mm | 1.200mm |

# TECHNICAL INFORMATION

# TECHNICAL INFORMATION

## Introduction

SFSP linen chutes are the most efficient method of quickly and economically disposing of soiled linen in multi storey buildings.

The dirty linen is usually bagged before loading into the chute. Side hung doors with large openings are therefore the normal standard on linen chutes. Hospitals generate about 3.0 kgs. of soiled linen per bed per day and a similar figure can be used for hotels. The increasing cost of using lifts and maintaining labour in hotels and hospitals reinforces the decision to install a linen chute.

## Application

Original equipment installed in hospitals and hotels for the vertical movement of loose and bagged soiled linen.

## Technical Information

SFSP linen or laundry chutes have the same basic specification as refuse chutes. For details on the construction, material specification and choice please see previous pages. A full specification for SFSP linen chutes can be found in this section.

## Linen Chute Sizes

Available in either 600 mm or 800 mm diameters though in practice the 600mm diameter is adequate for most purposes.

## Linen Chute Doors

SFSP normally recommends the use of a 450 x 450 mm door for use with linen chutes and would also recommend the use of electric interlocks. Linen chute doors are side hung on stainless steel hinges, with either separate or master keyed locks. The doors are fully self closing on an efficient hydraulic self closer. Labels can be attached bearing the message 'LINEN ONLY' in english and/or the local language.

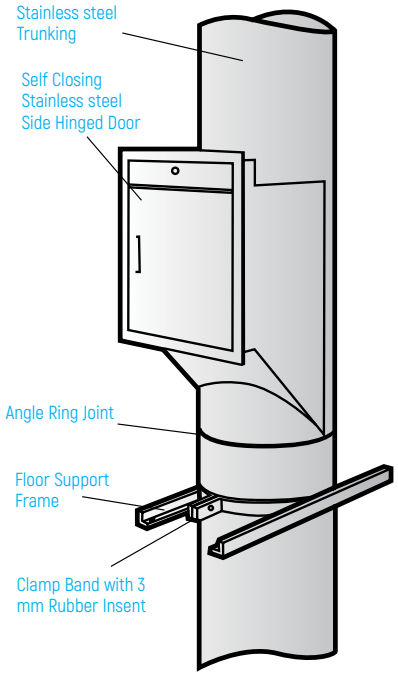


N.B. we can use side hinge door also for linen chute

## Fire Safety

To meet British Standards of fire safety an automatic fusible linked fire shutter door with a 1 1/2 hour fire rating should be fitted to the bottom of the linen chute, in the linen collection room. Fire sprinklers are also recommended to be fitted at every second floor. The sprinklers are fitted inside the chute entry section and do not interfere with the loading or fall of the soiled linen.

## Electric Interlocks

To give increased operator safety we strongly recommend the use of "time delay" interlocks inside hung door linen chutes.

## Accessories

The majority of accessories are available with linen chutes as are deceleration tracks, trolleys and containers for carrying bagged or loose linen-the range can be seen in the containers section.

## Deceleration Tracks

Soiled linen bags, when fully loaded, can weigh between 25 to 50kgs, dependent on size and the manner in which they are packed. A 50kgs solidly packed bag of soiled linen achieves a reasonably high terminal velocity and it is in this type of situation that SFSP recommends the use of deceleration tracks. For buildings of up to 5 storeys, a short deceleration track should suffice. Obviously, the higher the building the longer the length of deceleration track. Appreciating that floor space is always at a premium, SFSP offers, curved and helical deceleration tracks, to achieve the same result in less space. Deceleration tracks can also be used to bring the bagged linen directly onto a sorting table. Made from stainless steel and jointed by R.S. angle rings. Support stands are made from R.S. angle, painted ready for bolting to floor or wall. Illustrated are standard types. Other lengths and models are available to customer specification to match height and width of the linen chute.
N.B. Drawings show deceleration tracks with cut-out

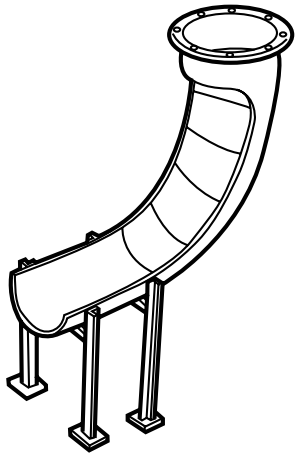

Straight Short Deceleration Track

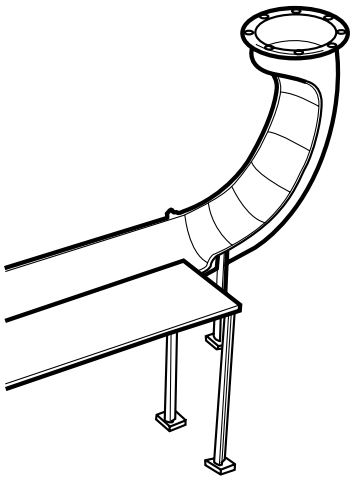

Deceleration Track Delivering Bagged Linen to Sorting Table

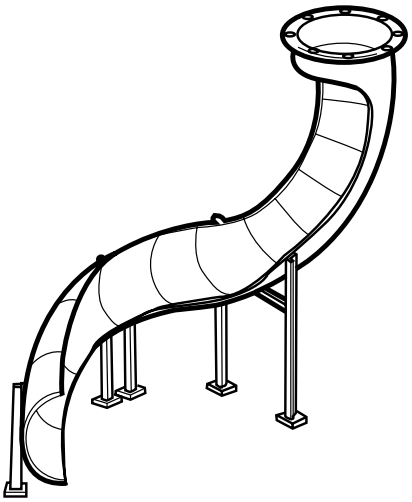

Curved Deceleration Track

# REFUSE CHUTES EXAMPLES

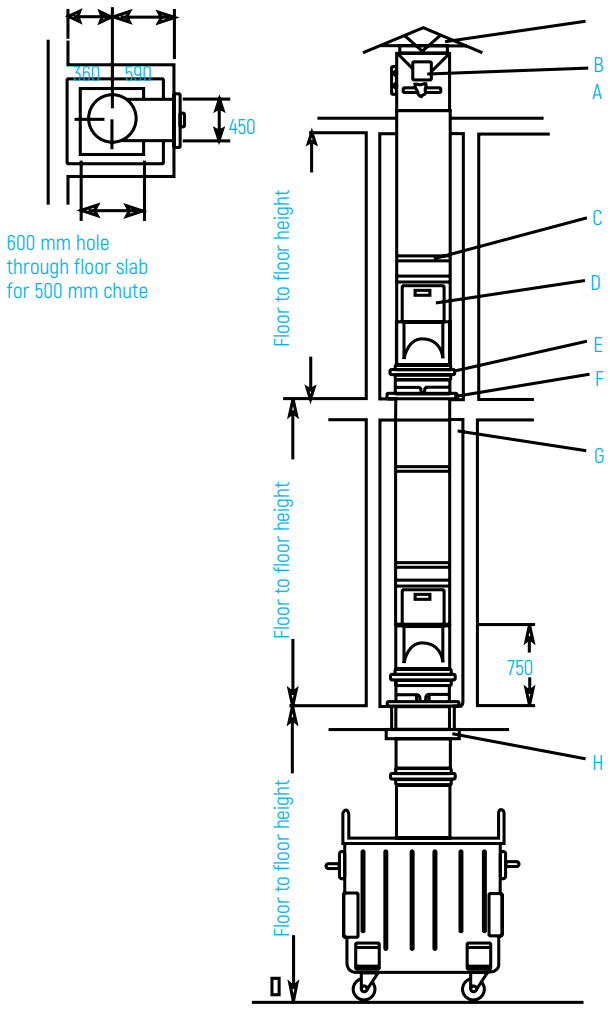


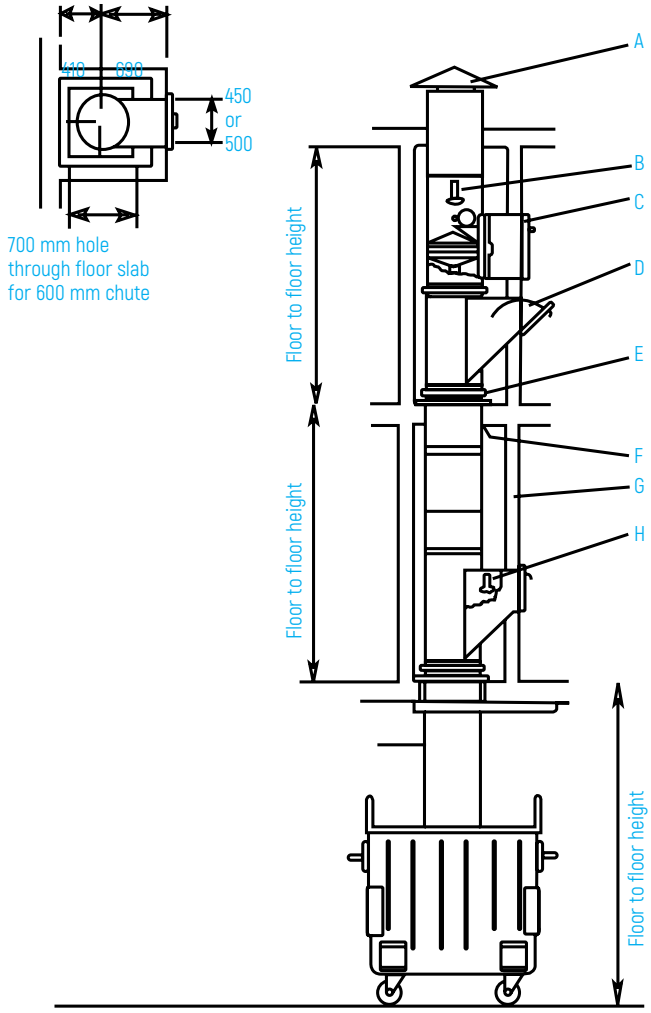


## ALL DIMENSIONS IN MM

A. Cowl with insect screen.
B. Automatic exhaust air fan with access door.
C. 1 1/2 hour fire rated hopper.
D. Angle ring joint.
E. Floor support frame
F. Floor opening to be infilled by contractor.
G. Enclosing walls built after chute installation.
H. Fire shutter door.
NB. Flashing of vent pipe to roof by other.

## ALL DIMENSIONS IN MM

A.Full diameter vent and cowl (or as specified)
B. Disinfecting and sanitizing unit
C. Automatic chute cleaning system
D. 1 1/2 hour fire rated hopper
E. Floor support frame
F. Floor opening to be infilled by contractor
G. Enclosing walls built after chute installation
H. Sprinklers
I. Fire shutter door
J. Discharge section

# COMPLETE STANDARD REFUSE CHUTE SPECIFICATION FOR A ☐ STOREY BUILDING

## Part 1: General

*1.01 Included. Supply and installation of refuse chute system, with certain accessories and ancillary equipment as specified.

*1.02 Not Included. The provision of floor drains, water taps, electrical isolator boxes, infill floor slabs and erection of enclosing walls or the connection of electric or water supply to any equipment in this section.

1.03 Authority. The provided equipment shall meet the requirements of BS 1703: 1977 and BS5906: 2005. Design and components currently used in SFSP refuse chutes shall be considered the standard for quality, performance and appearance.

*1.04 Service and Parts. The manufacturer shall maintain the ability to supply spare parts and components, for a period of three years from the date of manufacture.

*1.05 Manufacturer. Products for use in this section shall be provided by:
Specialized Factor for Steel products (SFSP)
Jeddah, Kingdom of Saudi Arabia.
Tel. + 966 2 6374482 Fax. +966 2 6361963
(or other equal and approved).

*1.06 Submittals. Following receipt of order the manufacturer shall provide fully dimensioned shop drawings for approval prior to manufacture.

## Part 2: Products

*2.01 Supply. As detailed on drawing a ☐ mm internal diameter refuse chute system as manufactured by Specialized Factory for Steel Products (SFSP)

*2.02 Material Trunking. All vertical chute trunking, chute entry sections and vent pipes shall be manufactured from ☐ mm stainless steel . Stainless steel used in this section shall be type 304 stainless steel to BS 1449 or as specified.

*2.03 Hoppers. Shall be provided to ☐ storeys of the refuse chute and manufactured as follows:
The hopper door face will have maximum size of ☐ x ☐ mm and be designed to ensure that refuse inserted into the hopper cannot cause a blockage in the chute. The hopper shall be self closing ☐ and sealing, have a 1 1/2 hour fire rating.

*2.04 Floor Support Frames. The manufacturer shall provide ☐ No 35 x 35 x 3mm R.S.A. frames with welded clamp bands. All fixing nuts and bolts to be rust proofed after manufacture.

*2.05 Discharge. The manufacturer shall provide a stainless steel discharge to be connected to the underside of a fire shutter door. Fire shutter shall be automatic in operation and be capable of cutting off the chute and its shaft from the refuse room.

*2.06 Chute Cleaning. The manufacturer shall provide a factory fitted electrically powered automatic chute cleaning system.

The chute cleaning system, to be fitted above the topmost entry section, shall have its own separate housing and side hung, Stainless Steel faced lockable access door. The cleaning system shall consist of a cylindrical housing, with two bands of stiff nylon brushes firmly attached, a geared electric motor,cable, stabilizing weight, flushing head spray and the manufactures standard electric logic control installed to ensure efficient cleaning of the internal surfaces of the chutes.

*2.07 Disinfectant and Sanitizing Unit. A factory fitted disinfectant and sanitizing unit shall be provided. The unit shall be automatic in operation capable of injecting odour counteractant into the supply of the automatic brush cleaning system. YES | NO

*2.08 Ventilation. The chute shall extend through the roof, terminating 1.2m above roof level complete with a weathering terminal or as specified.

*2.081 Exhaust Fan. The manufacturer shall provide a Factory fitted foul air exhaust fan, the fan to be fitted internally in the refuse chute above roof level. An access door will be provided for servicing the fan. The fan shall be protected above and below by lightweight Mesh screens, which are to be removable for cleaning. The fan motor shall be 1/6 HP, Class H continuously rated, capable of a 200m3/hour air displacement. Electric supply 220/240v, or 110/120v, 50/60 Hz, 0.8A. YES | NO

*2.09 Sound Damping. The total vertical length of all exterior surfaces of the refuse chute shall have a factory applied coating of Sound Damping Compound. The coating shall be applied at the rate of 1.8kgs/m2, or to give a coating of not less than the thickness of the substrate. YES | NO

*2.10 Chute Construction. The chute shall be fully factory assembled and all joints except those required to separate the sections for shipment and installation, shall be lock seamed or welded. The hopper door shall be bolted in place on the entry sections and checked to ensure proper alignment with the inner baffle plate. Sections shall fit inside the section below and there shall be no bolts, rivets or other projections inside the chute, to impede the free flow of falling refuse. The manufacturer shall provide sealant to ensure all joints are watertight and further provide all other equipment necessary to execute the contract.

*2.11 Automatic off/ on sprinkler, fully automatic currentless

## Part 3: Execution

*3.01 Equipment. Shall be protected at all times from physical damage. Immediately upon delivery on site the equipment shall be stored in a safe and weatherproof location.

*3.02 Construction waste. Under no circumstances shall the chute be used for construction waste.

*3.03 Inspection prior to installation. The manufacturer shall inspect the area of installation, verify any dimensions and advise of conditions detrimental to proper and timely completion of the work.
*3.04 Installation. The manufacturer shall where instructed, provide experienced technicians to install the chute. The chute shall be installed in compliance with the manufacturer's standard instruction and shop drawings.

*3.05 Testing and Commissioning. The manufacturer's technician shall test and commission the refuse chute system after repairing or replacing any damaged parts.

*3.06 Acceptance. The manufacturer's certificate of acceptance shall be signed by the main contractor or client, on successful completion of this work.
*Optional Items-Please Specify Where Required

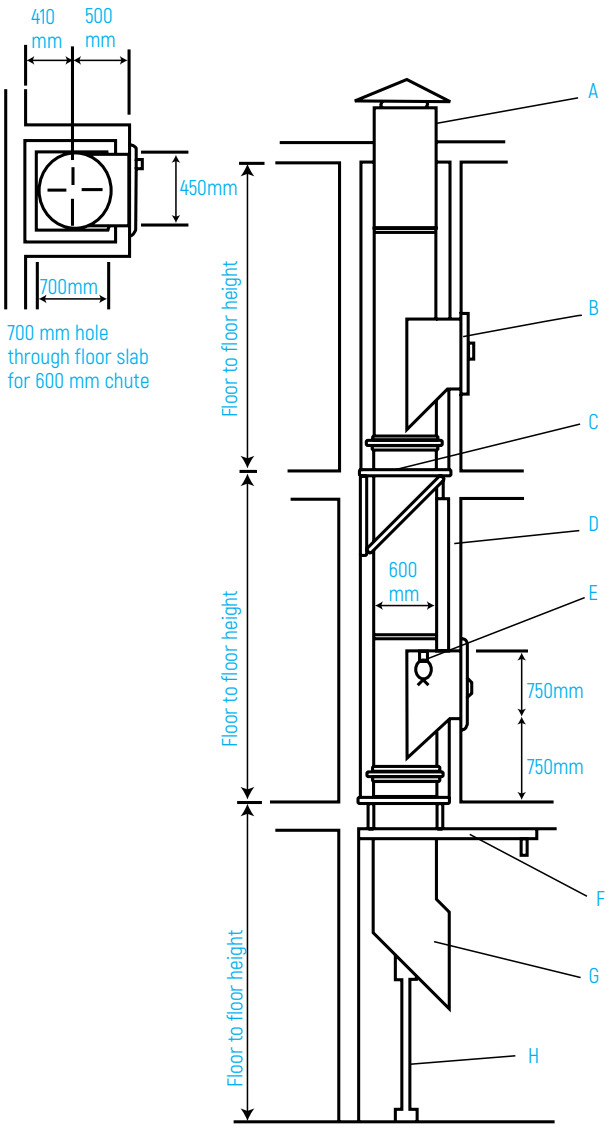


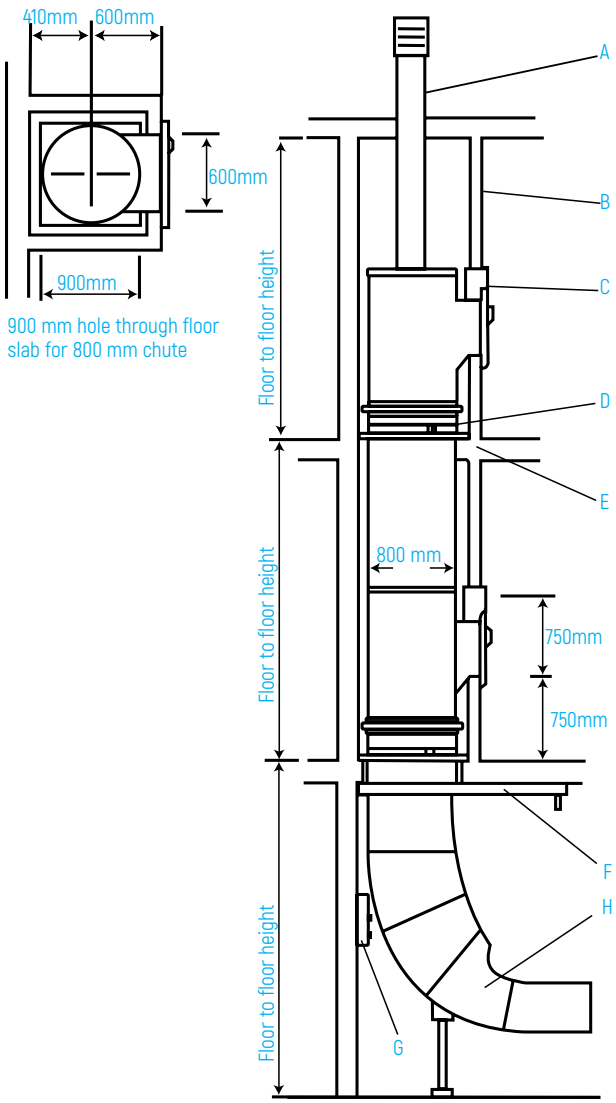


## ALL DIMENSIONS IN MM

A. Full diameter stainless steel vent (or as specified).
B. 2 hour fire rated side hung door entry.
C. Support fixed to shaft wall by special gallows bracket.
D. Enclosing walls built after erection of chute.
E. 1/2" sprinkler head to be fitted every other entry.
F. Fire shutter door fixed to underside of floor slab.
G. Reinforced angle discharge.
H. Tubular Support

## ALL DIMENSIONS IN MM

A. 150 mm diameter vent (or as specified).
B. Face wall built after erection of chute.
C. Electrically interlocked side hung doors.
D. Chute support mounted on structural floor.
E. Floor opening to be infilled by builder.
F. Fire shutter door fixed to underside of floor slab.
G. Master control panel for interlocks (1500 mm off floor level).
H. Short deceleration track.

# COMPLETE STANDARD LINEN CHUTE SPECIFICATION FOR A ☐ STOREY BUILDING

## Part 1: General

*1.01 Supply as detailed on drawings a ☐ mm internal diameter linen chute as provided by SFSP.

*1.02 Not Supplied or included in this section, the provision of floor drains, water taps, electrical isolators, infill of floor slabs and
erection of any enclosing walls or the connection of electric or water supply to any equipment in this section.

*1.03 Manufacturer. Specialized Factory for Steel Products SFSP,
Kingdom of Saudi Arabia.
Tel. + 9662 6374482 Fax. 9662 6361963 . (or other equal and approved)

*1.04 Submittals. The manufacturer shall supply detailed shop drawings for approval prior to manufacture
(following receipt of order).

## Part 2: Product

*2.01 Material. All vertical chute trunking entry sections and vent pipes shall be manufactured from ☐ mm stainless steel Type 304 BS1449 or as specified.

*2.02 Doors. The manufacturer shall provide ☐ No.600mm x 600mm stainless steel, fully opening, automatically closing side hung doors. the doors shall be self sealing, with a
lockable handle, key to pass and have a 2 hour fire rating.

*2.03 Ventilation. The manufacture shall provide, from the top entry section on the ☐ the storey, a top cover plate with sufficient vent pipe of ☐ mm diameter to pass through the roof space terminating 1.2 meters above the roof with a terminal and
weathering cravat, or as specified.

*2.04 Discharge. The manufacturer shall provide a 2mm stainless steel angled discharge, with a tubular leg for additional support or a deceleration track. The discharge section shall pass through a 1 or 2 hour fire rated, fire shutter door complete with 165°F fusible link. (As specified)

*2.05 Sprinkler. As a fire precaution the
Manufacturer shall fit a 15mm sprinkler to the top cover plate, above the entry section on the top floor and/or at every other floor. (Optional)

*2.06 Electric Interlock. The manufacturer shall provide with each side hung door, an electro-magnetic solenoid bolt. The electric interlock system should be mounted in the panel above the entry section. Operation shall be push button, with one indicator lamp, green indicating ready for operation and Red indicating system in use.

The master control box for the interlock system shall be mounted in the laundry room, close to the linen chute discharge point. The interlock system shall operate off a 120/240v electric supply reduced to 24v for safety and shall have a manufacturer's factory fitted preset timer. The timer shall be preset to allow single use of the chute at any given time. (Optional)

*2.07 Construction. The linen chute shall be fully ☐ factory fabricated and all joints except those required to separate the sections for shipment and installation, shall be welded or lock seamed tight.
The side hung doors and electric interlocks shall be factory fitted and tested. All chute sections shall fit inside the section below and there shall be no bolts, rivets or other projections inside the chute to impede the fall of the linen. The manufacturer shall provide
sealant and all other necessary equipment to successfully execute his contract.

## Part 3: Execution

*3.01 Equipment shall be protected at all times from physical
damage. Immediately upon delivery on site the equipment shall be stored in a safe and weather proof location.

*3.02 Construction waste. Under no circumstances shall the chute be used for construction waste.

*3.03 Installation. The manufacturer shall, where required, provide experienced technicians to install the linen chute. The chute shall be installed to the manufacturer's standard instructions and shop drawings. The manufacturer's technicians shall test and commission the linen chute system, after repairing or replacing any damaged or non functioning parts.

*3.04 Acceptance. The manufacturer's certificate of acceptance shall be signed by the main contractor or client, on successful completion of this work.

# Contact Information

## Sales Offices/Entities

**KINGDOM OF SAUDI ARABIA**
unitech.ksa@ikkgroup.com

Jeddah
Tel : +966 12 627 8222

Mak kah/Taif
Tel : +966 12 541 1206

Mad inah
Tel : +966 14 842 1095

Yanbu
Tel : +966 14 390 1499

Khamis Mushayt
Tel : +966 17 237 5929

Gizan
Tel : +966 17 321 6660

Riyadh
Tel : +966 11 292 8200

Qassim / Buraidah
Tel : +966 16 382 3946

Tabuk
Tel : +966 14 423 5203

Dammam
Tel : +966 13 859 0097

Hufuf
Tel : +966 13 530 1474

Jubail
Tel : +966 13 361 4390

**UNITED ARAB EMIRATES**

Dubai - Al Rashidiyah
unitech.dubai@ikkgroup.com
Tel : +971 4 2591 773

Abu Dhabi - Musaffah
unitech.auh@ikkgroup.com
Tel: +971 2 552 3393

**BAHRAIN**

Manama
unitech.bahrain@ikkgroup.com
Tel : +973 17 874 897

**KUWAIT**

Kuwait City
unitech.kuwait@ikkgroup.com
Tel : +965 2 2459 984

**QATAR**

Doha
info@unitech-qatar.com
Tel: +974 4451 3301

**OMAN**

Muscat
unitech.oman@ikkgroup.com
Tel : +968 24 591 006

**LEBANON**

Beirut
unitech.lebanon@ikkgroup.com
Tel : +961 1 858 277

**EGYPT**

Cairo 6th of October City
unitech.egypt@ikkgroup.com
Tel : +20 2 3820 6477

**PAKISTAN**

Lahore - Punjab
unitech.pakistan@ikkgroup.com
Tel: +92 42 32301578

## SFSP Factories

**SFSP - KSA**
Specialized Factory for Steel Products
sfsp.jeddah@ikkgroup.com

3rd Industrial City / Jeddah
Tel: +966 12 637 4482

**SFSP / UAE**
SIGMA Factory for Steel Products
sfsp.uae@ikkgroup.com

DIC (Dubai Industrial City)
Tel : +971 4 818 1919

**SFSP / EGYPT**
Specialized Factory for Steel Products
sfsp.cairo@ikkgroup.com

6th of October City Giza
Tel : +20 2 3820 6477

**SFSP / LEBANON**
Specialized Factory for Steel Products / s.a.r.l
sfsp.lebanon@ikkgroup.com

Tanayel, Bekaa
Tel: +961 8 514 290

## Engineering & Design

**GERMANY**
unitech.germany@ikkgroup.com

United Deutscland GmbH
Stuttgart, Germany
Tel : +49 711 6868 7222

## Marketing & Multimedia

**Multi-D s.a.r.l**
multi-d@ikkgroup.com

Multi-D
Beirut, Lebanon
Tel : +961 1 841 155

Designed by Multi-d - www.multid-ikk.com